50/60/70/80/90 X-Model Series Rim Clamp® Tire Changers

For servicing single piece automotive and most tubeless light truck tire/wheel assemblies.

Any other type, including tube type and agricultrual, require special handling. Tires identified as truck tires need to adhere to OSHA standard 1910.177.

50X-EH-1 Shown with optional Robo-Arm® installed

90X-EH-L Shown

Parts Identification

READ these instructions before placing unit in service. KEEP these and other materials delivered with the unit in a binder near the machine for ease of reference by supervisors and operators.

HENNESSY INDUSTRIES
1601 J. P. Hennessy Drive, LaVergne, TN USA 37086 615/641-7533 800/688/6359 www.coatsgarage.com
HENNESSY INDUSTRIES INC. Manufacturer of AMMCO®, COATS® and BADA® Automotive Service Equipment and Tools.

Manual Part No.: 85607317 32
Revision: 04 /18

Parts Identification

The following pages include parts breakdowns with exploded view illustrations to help with ordering replacement or spare kits. Assemblies are noted where it is recommended that individual parts not be ordered separately. Note that the parts view illustrations are for multiple models and not all parts shown are on all models. Every effort is made to supply accurate exploded views, however, due to interim changes in manufacturing operations, some units may not be exactly as illustrated.

Table of Contents

Parts Identification **2**
Chassis System **4**
BL Arm Assembly **5**
Inflation Bracket and Tower Assembly **6**
Robo-Arm® Assembly **8**
Swing Arm Assembly **10**
Helper Arm Assembly **12**
Foot Pedal Assemblies **14**
Electric Model Foot Pedal Assembly 14
Air Model Foot Pedal Assembly 16
Table Top and Shaft Housing Assembly .. **18**
Inflation Guard Assembly - 6065, 7665 ..... **20**
Valve Assemblies **22**
Cylinder Assemblies **23**
Leverless Bead Lifter **24**
Electrical Schematics **26**
Domestic and C.S.A. 26
115V Motor, 2-speed 27
Pneumatic Diagram **28**
Notes **30**
Rim Clamp® Tire Changer **32**

Chassis System

Item	Part No.	Description
**1	80004911	Lube Applicator
**2	81062591	Lube Bottle (Red)
3	8106301	1/4" Hex Hd Self Tap Screw, Gr.5
**4	8182809	Lube Bottle Bracket
5	8182811	Inflation Pedal Cover
6	8181285	Inflation Pedal Decal
7	85607585	Metal Side Panel
8	8182040	M10-1.5 x 55MM Hex Hd.Cap Scr, Gr.8.8
9	8301032	3/8 Flat Washer, Zinc Plate
10	8107715	3/8-16 x 1-1/4 Hex Hd. Cap Scr, Gr.5
11	8181964	Plastic Accessory Tray
	85608840	Plastic Accessory Tray for Air Nozzle
12	85611044C2	Lubricator Bracket
13	8183778	Lubrication Notice Decal
14	85608582	3/4 x 3-1/2 SHSHS Screw
15	85609778	Water Separator Assy (Air Motor Machines Only)
16	8120055	5/8-11 Hex Nut
17	8182041	Chassis
18	8181851	B.L. Pad, Front

Item	Part No.	Description
19	8182088	5/16-18 x 1-1/4 TPHST Screw, Gr.5
20	8181855	B.L. Center Pad
**21	8181354	Bead Lifting Tool (Optional on Leverless Unit)
**22	85000783	Lift Tool Bootie Kit, Pkg of 10
23	924724	312-18 Hex Flange Nut
24	856104041	Tank Reservoir w/Cap
25	81856301	Tank Reservoir Cap, Red Push-On St
	8561040601	Tank Reservoior Cap Black Screw-On Style
26	8183452	5/16-18x5/8 HWHCS Screw
**27	85000850	Tire Paste Brush
**28	81837101	Universal Mounting Paste
**29	85009048	Lube Bucket Bracket & Brush Kit
30	85608894	Inflation Nozzle Cone
31	85610693	Washer
32	8104573	3/4" Straight Fitting
33	85610108	Plug, 1" Dia.
34	8101346	Clamp-Hose,1/2 X 1-1/4

**Accessory Item

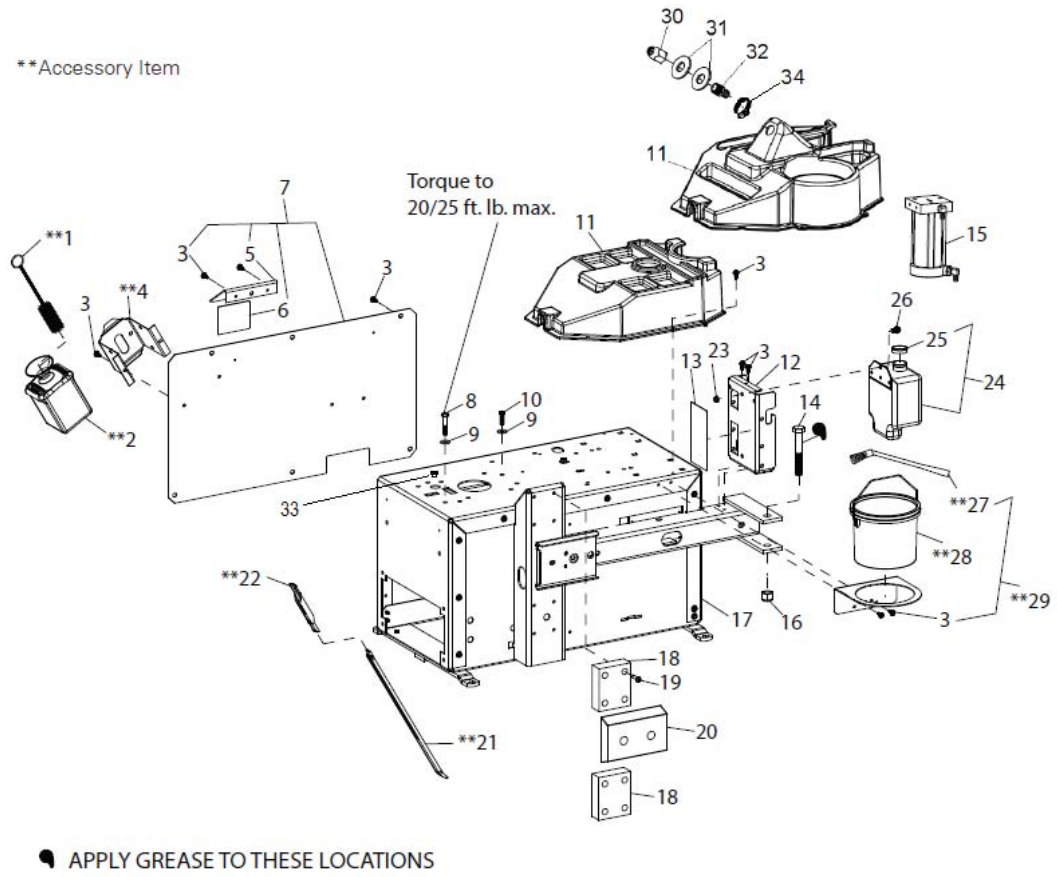

BL Arm Assembly

Item	Part No.	Description
†1a	8183312	B.L. Cylinder, 3/8" Fitting (Foot Ops)
†1b	81833124	B.L. Cylinder, 1/4" Fitting (Hand Ops)
†1c	81833125	B.L. Cylinder, 1/4" Fitting w/Heim Joint (70 Series, Hand Ops)
†1d	81833123	B.L. Cylinder, 1/4" Fitting (Hand Ops)
2	8181949	5/8 x 1-3/8 Clevis Pin
3	8181912	Clevis Clip
4	8182016	3/4"-10 Nylon Insert Lock Nut, Gr.5
**5	8183606	Shoe Bootie Kit, Pkg of 2
6a	8183529	B.L. Shoe, w/handle (Foot Ops)
6b	85608038	B.L. Shoe, Handle & Pivot W/C (Hand)
6c	85009199	B.L. Shoe, w/handle (Hand Ops)
7	8182043	5/8-11 Nylon Insert Lock Nut Gr.5
8	8181951	B.L. Shoe Pivot Bracket
9	70002301	1/2" Rubber Hand Grip (Foot Ops)
10	8182011	5/8-11 x 5" Hex Hd Cap Scr, Gr.5
*11	see p.22	B.L. Arm Valve
	see p.22	B.L. Arm Valve (old style)
12	902189	1/4-20 x.504 HHCS
13	8182009	3/4-10 x 3 3/4" HHCS
14	8120326	ø1/2" Hitch Pin
15	8180230	B.L. Spring
16a	8182550	Pivot Pin, B.L. Cylinder Rod (Foot Ops)
16b	85607837	Pivot Pin, B.L. Cylinder Rod (Hand Ops)
17	8181970	Bead Loosener Caution Decal
18	85611207	Bead Loosener Caution Decal
19	8182002	B.L. Arm
20	81855583	Shoulder Screw (sold as 3 pack)
21	925757	10/24 x 1" HHCS Screw
22	8301035	3/8-16 Hex Nyloc Nut
23	8182682	10-24 Nylon Insert Lock Nut Gr.5
24	85608037	Lever Link
25	8106301	1/4" Hex Hd Self Tap Screw, Gr.5
26	8182044	Neoprene Cushion Clamp
27	85610228	B.L. Lever Assembly
28	85608569	Heim Joint
30	85608567	Spacer
31	85608566	Spacer
32	8182579	Screw

†Cylinder Assemblies

***Valve (available only as individual component, see page 22)**

**Accessory Item

BL Arm Assembly (Foot Operated)

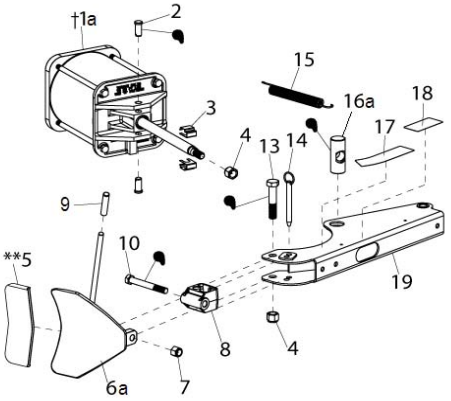

BL Arm Assembly (Hand Operated)

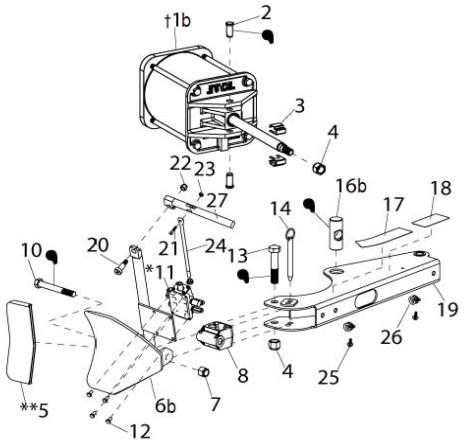

BL Arm Assembly (70-Series, Hand Operated)

Valve on Shoe

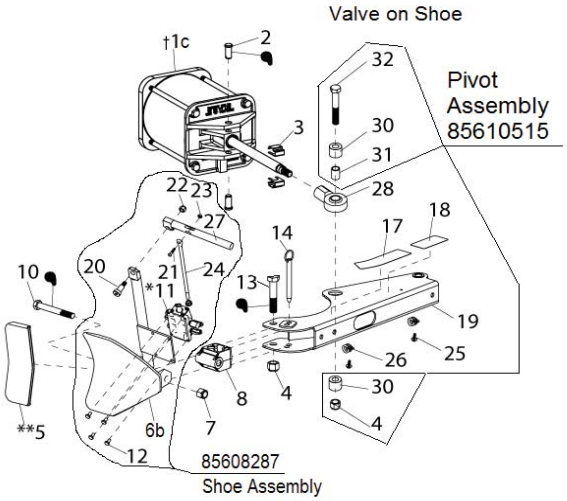

B.L. Arm Assembly - Hand Operated
Older model - Valve on Handle

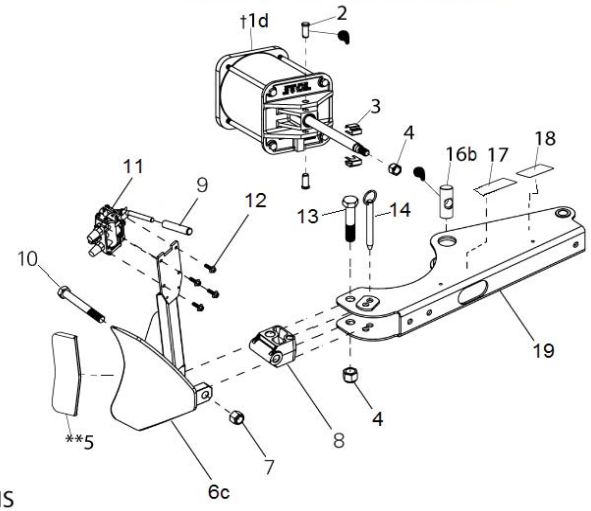

APPLY GREASE TO THESE LOCATIONS

Inflation Bracket and Tower Assembly

Item	Part No.	Description
1	8181933	Pedal Inflation
2	8102459	3/8" Self Tap Screw Gr.5
3	8107407	Hitch Pin Retainer
4	8104613	5/8" Ext. Tooth Lock Washer
5	8104611	5/8" N.F. Jam Nut Gr.5
6	8104610	3/4" N.F. Jam Nut Gr.5
7	8104612	3/4" Ext. Tooth Lock Washer
8	8181932	Inflation Brkt.
9	8180103	3/8 x 3-1/4 Clevis Pin
10	8104674	Bushing (3/4" Valve)
11	8106298	3/4" Valve Ported 1/4"-18 NPT
12	8143169	1/4-20 Whiz Lock Nut, Gr.5
13	8104600	1/4" Valve Comp.
14	8104673	Bushing (1/4" Valve)
15	8120408	1/4-20 x 1-3/4 H.H. Cap Scr., Gr.5
16	8120424	3/8"-16 Wash Hd. Lock Nut Gr.5
17	8182076	Shim Kit
18	85000816	Pressure Limiter
19	8000240	Washer 1" OD x 13/32 ID x 3/16"
20	8107715	3/8-16 x 1-1/4 Hex Hd. Cap Scr, Gr.8.8
21	8106303	3/8" Whiz Lock Nut, Gr.5
22	8106302	3/8" Whiz Lock Screw, Gr.5
23	8101018	0.392 x 0.687 x 0.0478 Washer
24	8181137	3/8-16 x 2-1/4 Hex Hd.Cap Scr, Gr.5
25	85611363	Decal-Wrnng
	8182373FR	Decal-Wrnng French (90X Only)

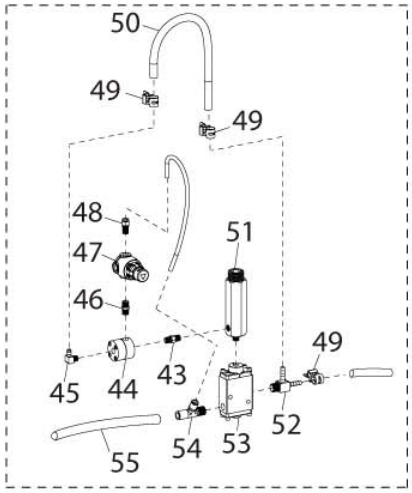

18 Pressure Limiter Assembly

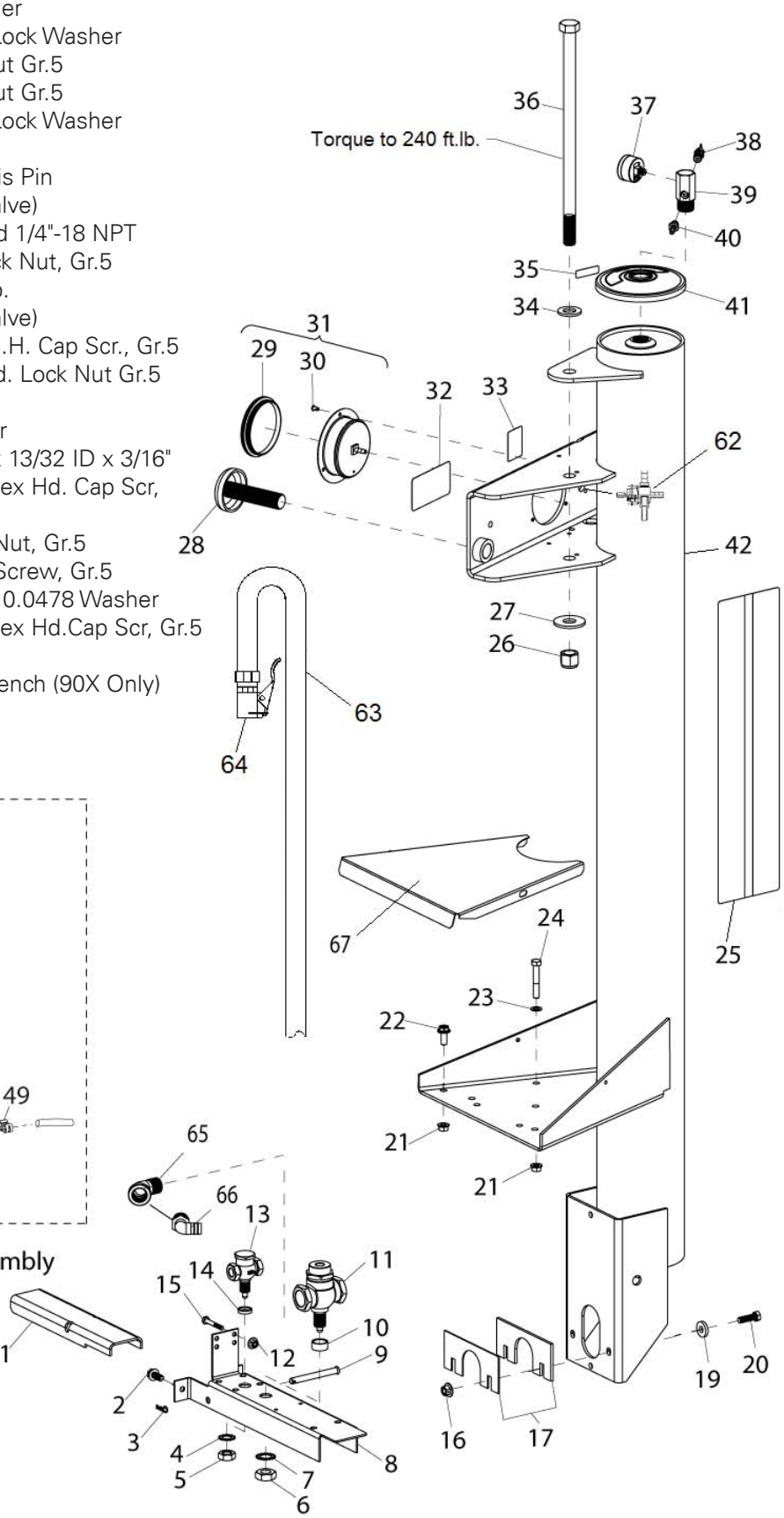

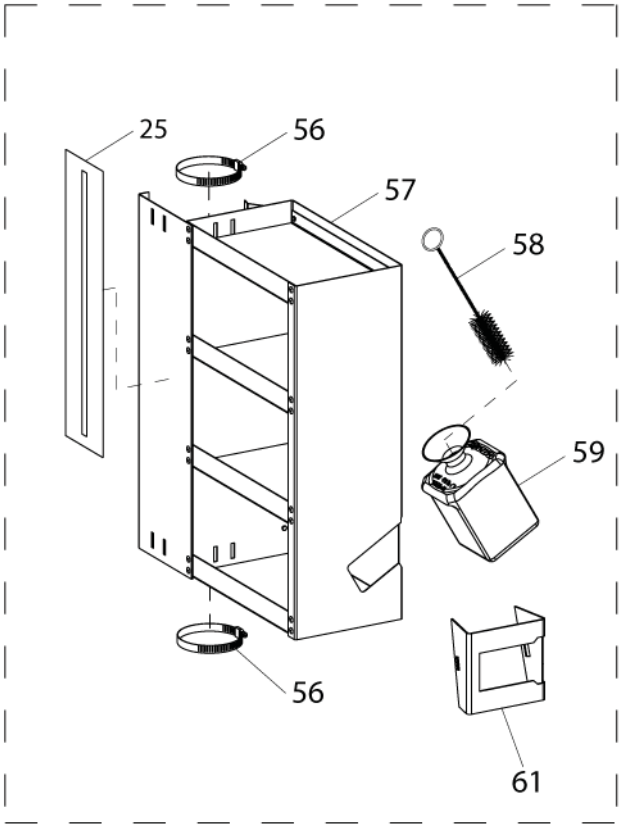

Item	Part No.	Description
26	8182016	3/4"-10 Nylon Insert Lock Nut, Gr.5
27	8100994	3/4 Flat Washer
28	8181114	Adjusting Knob Assy
	85607820	Adjusting Lock Knob (Leverless)
29	8107517	Gauge Lens, Screw On
30	8107983	Plastic Fastener
31	85610709	Flanged Air Gauge w/Fasteners
32	8109888	Inflation Warning Decal
33	8183597	Release Valve Decal
34	8182457	3/4" SAE Washer
35	8182059	Line Press Gauge Decal
36	8183635	3/4-10 x 14-1/2" Hex Hd. Cap Scr, Gr.5
37	8108968	Air Gauge
38	8182599	Safety Valve
39	8183434	Manifold/Gauge
40	8000378	1/4" Brass St. Fitting
41	8182458	Plastic Cap (Tower)
42	8183622	Tower/Air Receiver
	8183764	Tower/Air Receiver (7665)
43	8109471	1/8" Brass Hex Nipple
44	8109468	Pressure Repeater
45	8110497	Male Elbow 1/8 NPT x 1/4 Hose
46	8109472	1/8" Inline Filter
47	8111083	Regulator
48	8182035	1/8 NPT x 1/4 Tube Male St. Fit.
49	85606362	13mm Spring Hose Clamp
50	8103649	ø1/4 x 12" Hose
51	8110496	Volumn Chamber
52	8110325	1/4" NPT Male Run Tee
53	8109466	Piloted Valve
54	8111255	1/4 NPT x 3/8 x 1/4 Spl Tee
55	8184459	3/8 x 25" Black Rubber Hose
56	8182221	6" Hose Clamp
57	85610105	Accessory Box Assembly
58	8000491	Lube Applicator
59	8106259	Lube Bottle (Red)
61	8182167	Lube Bottle Brkt-Red
	8182809	Lube Bottle Brkt-Red (5050)
62	8183502	Bleed Valve manifold Assy.
63	8182052	Inflation Hose w/Air Chuck
64	8410419	Air Chuck
65	85000103	3/4" 45° EL Fitting
66	8107924	3/4" 90° Nylon EL Fitting
67	8182805	Tower Support Cover

Robo-Arm® Assembly

Item	Part No.	Description
1	8500916701	Plastic Foot Hold Down
2	8301017	ø1/2" Steel Ball
3	8183637	ø2 Ext. Retaining Ring
4	70002301	1/2" Rubber Hand Grip
5	85610656	1/4-20 x 5/16 LG BHCS
6	8182001	Screw - 10-24 x 3/4 Lg. SHCS
*7	see p.22	Robo Arm Valve
8	905563	Pin-Roll,1/4X1-1/2
9	8560888401	Cylinder Assembly 2.5″ Dia.
12	8181996	1/4 NPT x 1/8 Tube St. Fitting
13	**	1/8 x 6" Plastic Tube
14	8106301	1/4-20 x 3/4" Soc Hd HWHST Screw
15	8182044	Neoprene Cushion Clamp
16	8182016	3/4"-10 Nylon Insert Lock Nut, Gr.5
17	8100994	3/4" x 2" OD Flat Washer
18	8181038	Swing Arm Pivot Pin
19	**	1/4, 58" Black Rubber Hose
20	81849043	Rear Arm Weldment (Red)
21	81849053	Front Arm Weldment (Red)
22	8183703	3/4-10 x 10-1/2″ HHCS, Gr5
23	8182457	3/4″ x 1-1/2″ OD SAE Flat Washer
24	8184226	1/4-28 Grease Fitting
25	8183635	3/4-10 x 14-1/2″ HHCS, Gr.5
26	8184059	Manifold Assembly
27	8000378	1/4″ Brass St. Fitting
28	8108968	Air Gauge
29	8183434	Manifold/Gauge
30	8182599	Safety Valve
31	8109481	1/4 NPT x 1/8 NPT RDCR Fitting
32	8183636	Spacer, .781 ID x 2.75 OD x 1.5

***Valve (available only as individual components, see page 22)**
****Hose Reels**

Hose Reels

Item	Part No.	Description
50-ft.	85000375	1/4" ID x 1/2" OD Black Rubber Hose
50-ft.	85000376	1/8″ OD x 0.25 Plastic Tube
100-ft.	85609142	3/8″ OD x 0.05 Plastic Tube

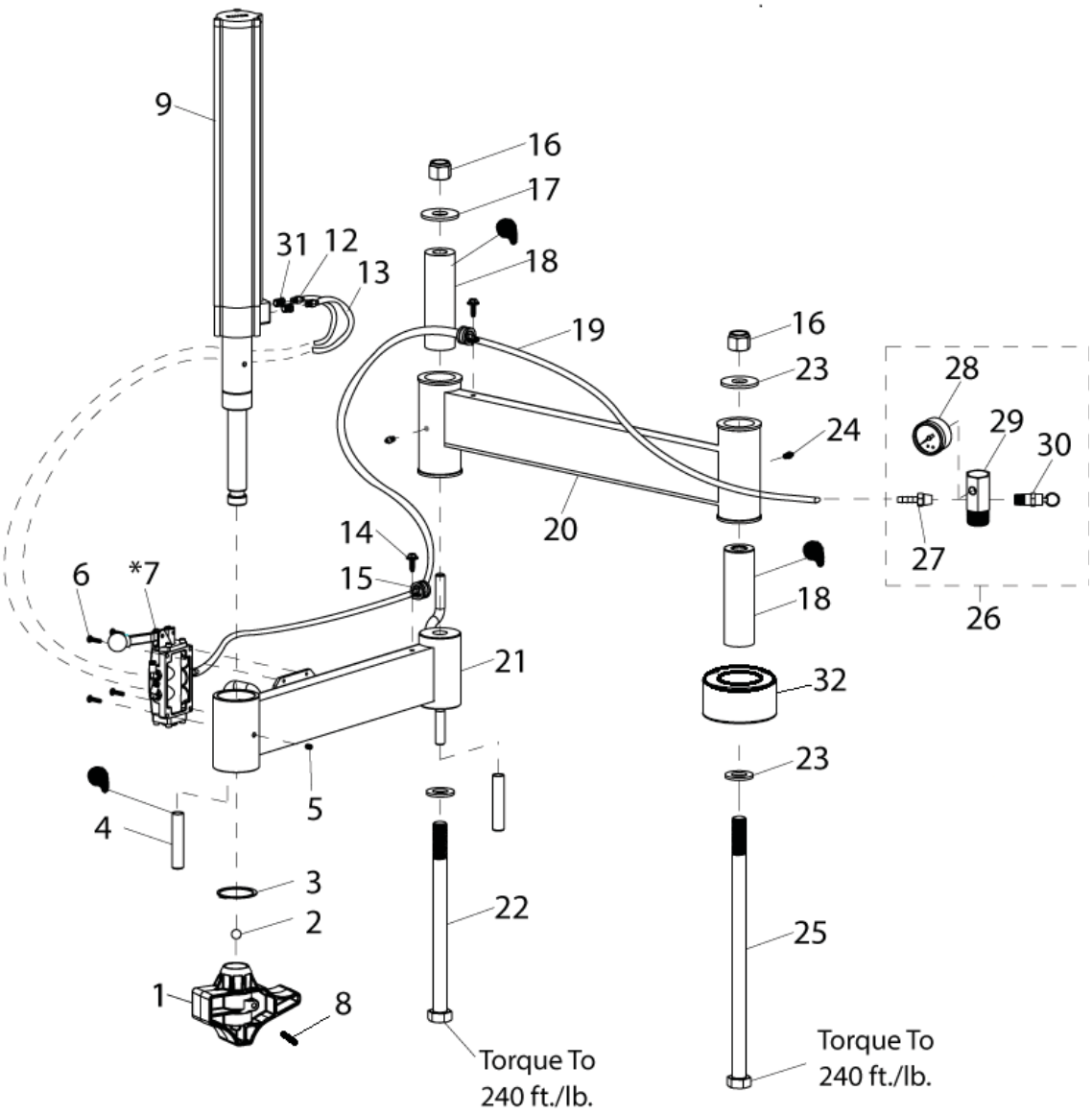

APPLY GREASE TO THESE LOCATIONS

Swing Arm Assembly

Item	Part No.	Description
1	8183151	5/16-18 x 0.75 SBHCS, Gr.8
2	8181771	Vertical Slide Knob
3	8182028	Vertical Slide Spring
	83031235	Vertical Slide Spring (Leverless)
4	8182339	Swing Arm Shim Kit
5	8181038	Swing Arm Pivot Pin
6	81828202	Swing Arm, for R.H. Cam Lock
	818282003	Swing Arm, Locking (Leverless)
7	8100979	Handle Grip, Black Flex 3/4 I.D.
8	8183673	Lock Handle/Lift Cam W/C, R.H.
9	8181095	1-5/8 Snap Ring
10	8182371	1-5/8 Dia. Wave Washer
11	8181113	1/2"-13 Jam Nut, Gr. 5
12	85606343	Lock Plate
13	8181035	Lock Plate Lift Pin
14	8182812	Vertical Slide Shaft
15	8182031	Rubber Bumper
16	85606344	1/2 x 5/8 Shoulder Screw
17	8182813	3/8-16 x 3/4" Ctr Bore Cap Scr, Gr.8
18	8182027	7 ga. x .406 ID x 1.28 OD Washer
19	8106302	3/8" Whiz Lock Screw, Gr.5
20	8140667	1/4-20 x 1/4 Soc.Hd.Set Scr, Gr.8
21	8182786	5MM x 25MM Dowel Pin
22	8182787	0.562 Diameter x 0.515 LG. Roller
23	81827881	Duckhead® Mount/Demount Tool Kit (Metal)
24	85610655	Nut-Hex,Lck,Rvrs,3/8-16
25	8183061	Duckhead Mount/Demount Tool Kit (Nylon)
26	85607803	Roller Mount
27	85606462	Bead Roller (Duckhead) Pkg.
28	8184432	Duckhead Mount/Demount Tool Kit (Grey)
29	8183055	3/8-16 x 0.750 SBHCS Screw
30	85607820	Adjusting Lock Knob
31	85000317	5/16-18 x 1-1/2 HSWHCS Screw, Zinc
32	8107635	5/16" Plain Washer
33	85607814	Lock Assembly
34	85607816	Lock Block
35	70002301	1/2 x 3 Handle Grip
36	85608961	Hybrid Duckhead Tail
37	85608959	Hybrid Duckhead Mount/Demount Tool Lever Type
**38	8184600	Manual Bead Depressor

**Accessory Item

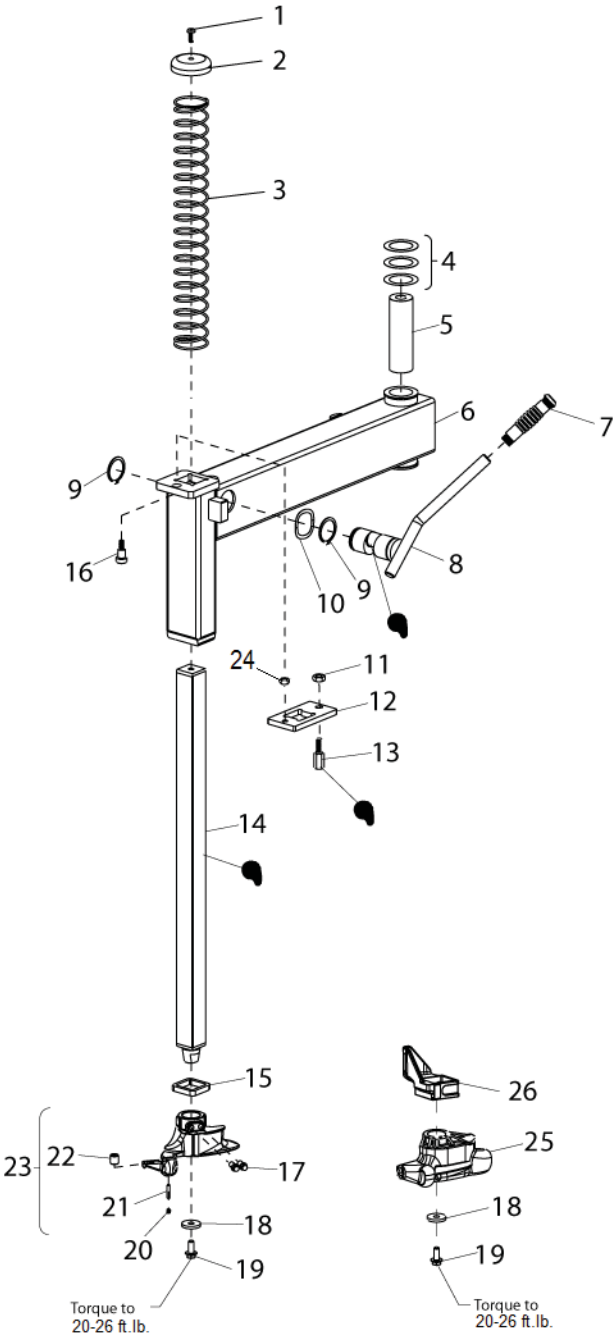

Steel
DuckHead®
Mount/Demount Tool

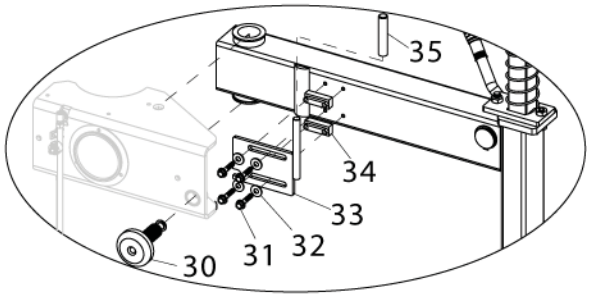

Swing Arm Locking Mechanism
(Leverless Unit)

Nylon
DuckHead
Mount/Demount Tool

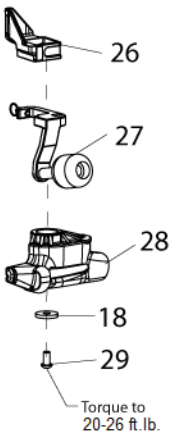

Grey
DuckHead
Mount/Demount Tool

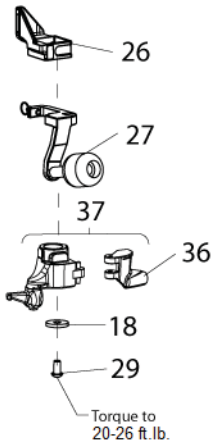

Hybrid
DuckHead
Mount/Demount Tool
Lever Type

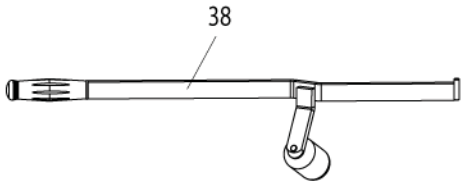

Manual Bead Depressor

APPLY GREASE TO THESE LOCATIONS

Helper Arm Assembly

Item	Part No.	Description
1	8100964	1-1/4-inch Retaining Ring
2	8185593	Auxillary Arm Small Roller
3	8181983	10-24 x 5/8 BHSCS, Gr.8
*4	85609907	Helper Arm Valve Assembly
5	8180217	5/16-18 x 3/8-inch Set Screw
6	85609884	Front Arm Weldment
7	8185594	Auxillary Roller Shaft
8	8185592	Auxillary Arm Large Roller
9	8182579	HHCS Screw
10	8182016	3/4-10/E23 Nylon Hex Nut
11	85609886	Rear Arm Weldment
12	85610016	3/4-10 x 7 HHCS Screw, Gr.5
13	8182044	Neoprene Cushion Clamp
14	8106301	1/4" Hex Hd Self Tap Screw, Gr.5
15	85607010	3-inch Cylinder Assembly
16	85606919	Ext. Retaining Ring
17	8185035	13mm Flat Screw
18	85609897	Cylinder Rod End
19	85610249	Vertical Slide
20	8182457	Washer
21	85610284	SCS Flat HD Screw
22	85610250	Long Guide Gib
23	8143815	3/8-16 x 3-1/2 HHC Screw
24	85609885	Tube Bracket Weldment
25	8181872	Torsion Spring Sleeve
26	85609899	Female Half Clamp
27	8301035	3/8-16 Hex Nyloc Nut
28	7000230	1/2" Rubber Hand Grip
29	8184226	1/4-28 Grease Fitting
30	8106303	3/8" Whiz Lock Nut, Gr.5
31	85610241	Spacer
32	8181997	90° Elbow 1/8 NPT x 1/8" Fitting
33	8109481	1/4 NPT x 1/8 NPT RDCR Fitting
34	871101642	1/4 NPTMX, 1/4F TEE FITTING

***Valve Assemblies (available only as individual components, see page 22)**

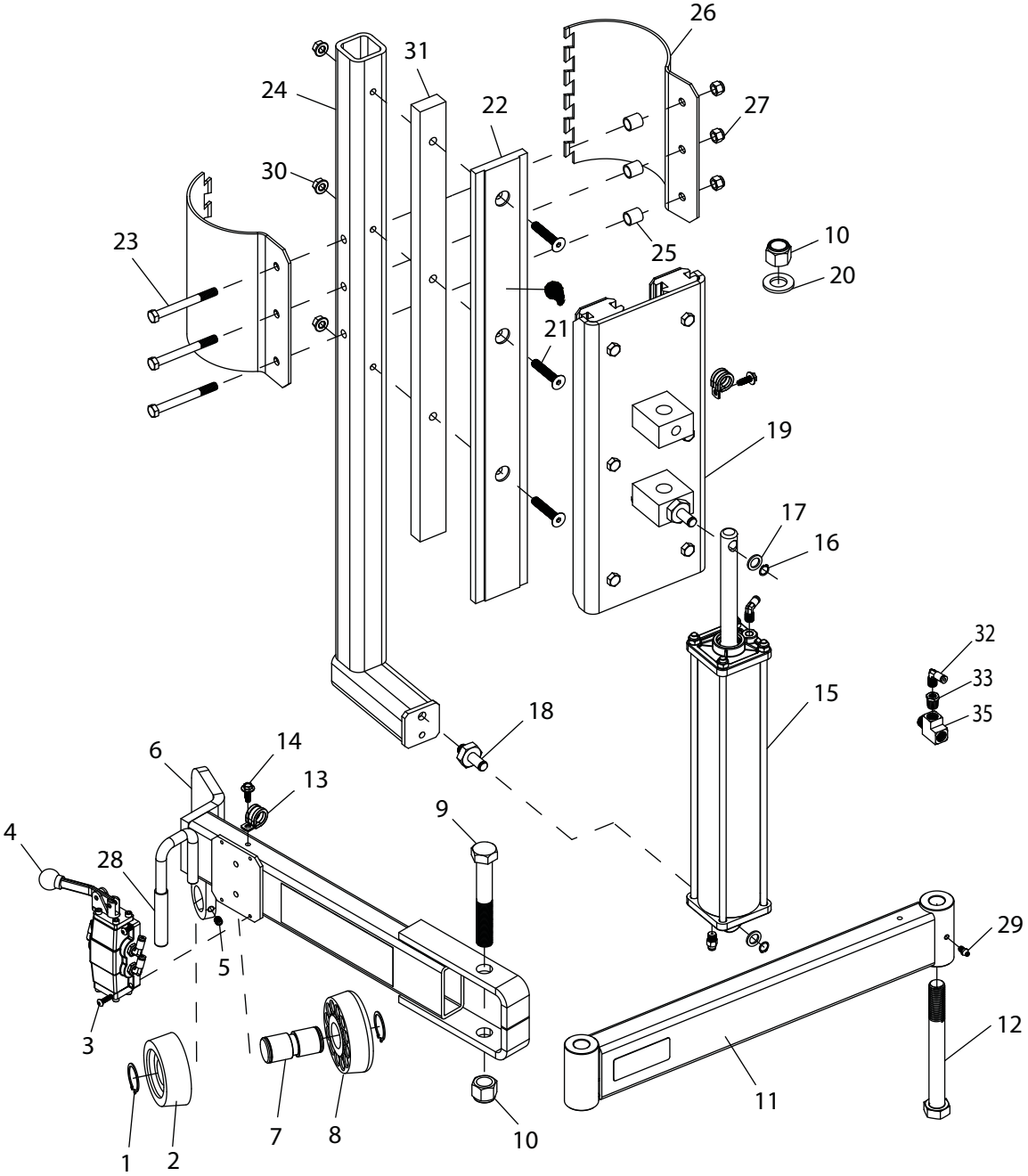
26
31
24
22
27
30
23
25
10
20
21
19
17
16
32
33
35
15
18
14
6
13
9
4
28
29
5
3
12
11
7
8
10
1
2

Foot Pedal Assemblies

Electric Model Foot Pedal Assembly

Item	Part No.	Description
1	8181918	Valve Brkt. Spacer Bar
2	8181872	Torsion Spring Sleeve
3	8181948	1/2" Nylinder Bearing
4	8181675	Standard Pedal
5	8182327	Pedal Spacer
6	8181911	Pedal Spacer
7	8182358	Pedal Spacer
8	8181369	1/4-20 Lock Nut, Nyl. Ins. Gr.5
9	8182670	Spring Stop Bracket
10	8181707	Torsion Spring
11	8104945	1/4 x 1 HWHSTC, Gr.5
12	8181977	3/16" x 1-1/2" Clevis Pin
13	8120469	Hair Pin Cotter
14	8181984	1/4-20 x 1" Hx.Hd.Cp.Scr., Gr.5
15	8181923	Stop Washer
16	8181708	Pedal Extension Spring
17	8182682	10-24 Nylon Insert Lock Nut Gr.5
18	8181699	Lever Assembly - Switch
19	8182743	10-24 x 3/8 SHCSS Gr.8
20	8182363	Spacer - Sw Pedal Lever-Red
21	8501003801	Cam Lever Follower
23	8107635	5/16" Flat Washer
24	85608197	Pedal Stop
25	8107419	Hair Pin Cotter
26	8301121	Washer
27	8183398	Pedal Shaft
28	85009985	Valve Mounting Bracket
29	8106301	1/4" Hex Hd Self Tap Screw, Gr.5
30	8181989	10-24 x 3/8 SHCS, Gr.8
31	8182001	10-24 x 3/4 SHCS
37	see p.22	Valve, TT Clamp Pedal
38	see p.22	Valve, TT Rotation Pedal
44	85009982	Spacer-Valve, Clamp, TT
45	8301537	5/16-18 x 1/2 SHSHS Screw
46	85008195	Pivot Link
47	8184675	Oil Injector Assembly
48	85608560	Block-Lower Stop Pedal
49	8103737	Release Valve
50	8301072	#6 Internal Tooth Lk Washer
51	8182958	Reversing Switch, Kit
52	8181728	Switch Actuator Lever
53	8181983	10-24 x 5/8 BHSCS, Gr.8
55	8181959	Cover-Switch
57	8182332	Guard-Foot Pedal
58	8106455	Clevis Pin
59	8103737	Release Valve
60	902189	1/4-20 x.504 HHCS
61	8111032	1/4" Heavy Fender Washer
62	85609741	2-Speed, 2-Wire Harness
63	85609742	2-Speed, 4-Wire Harness
64	85609743	Disk Switch
65	85609746	Foot Pedal Switch
66	85000357	#4-40 Nut-Hex, Nylk
67	85609917	2-Speed, Switch Plate
68	95000064	#4-40 x 3/4 Lg. SHC Screw
69	8181982	Screw, -HHCS,M3X12

***Valve (available only as individual component, see page 22)**

**Accessory Item

Foot Pedal Assembly (Elec.)

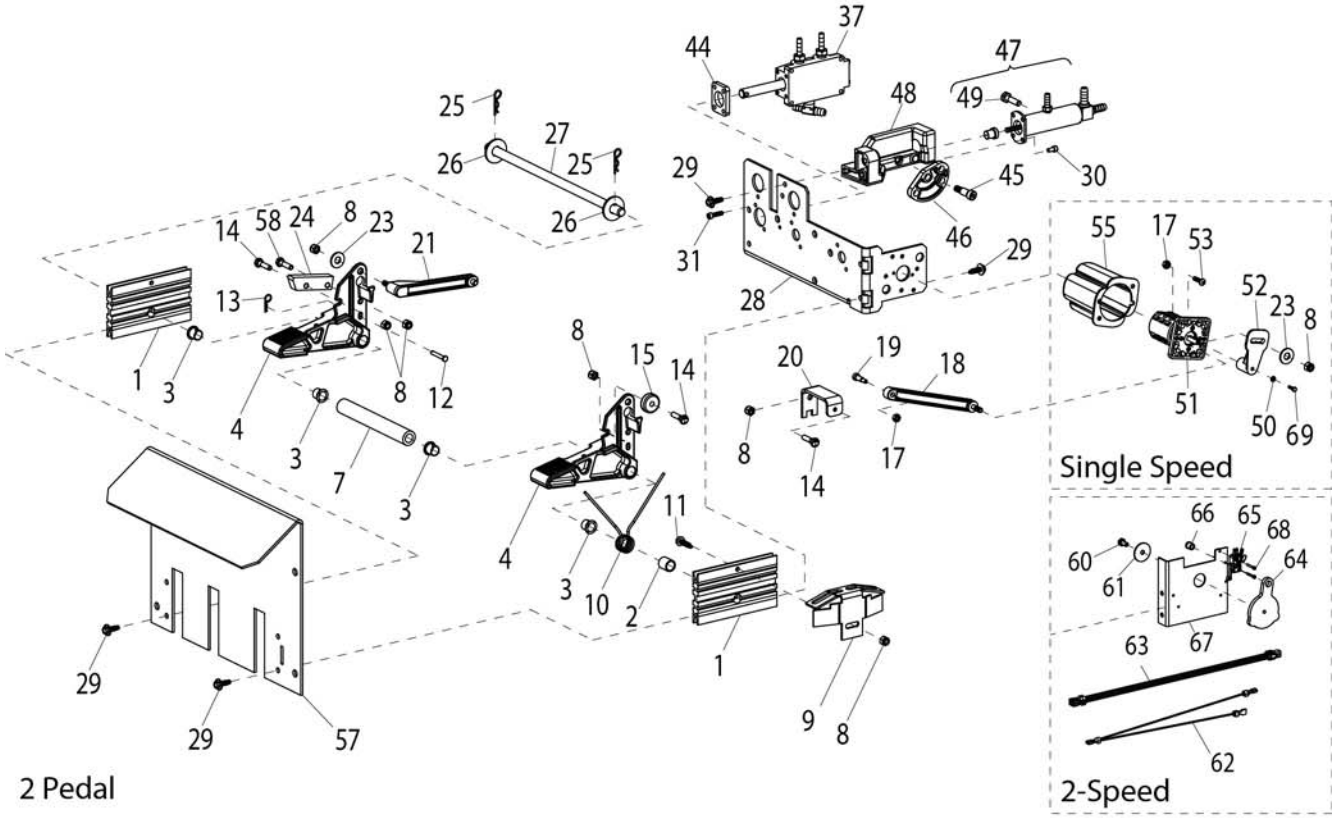

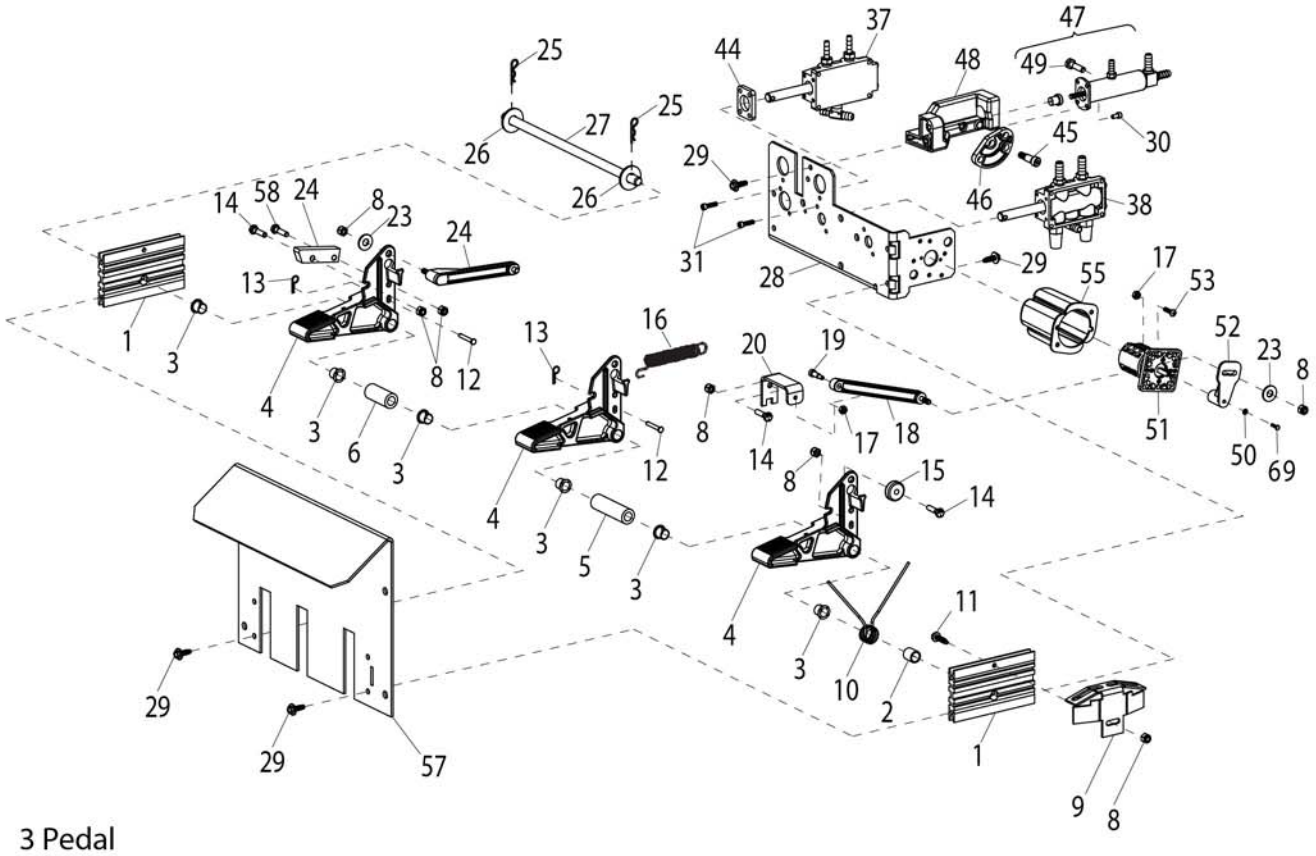

Air Model Foot Pedal Assembly

Item	Part No.	Description
1	8181918	Bar-Valve Brkt. Spacer
2	8181872	Torsion Spring Sleeve
3	8181948	1/2" Nylinder Bearing
4	8181675	Standard Pedal
5	8182327	Pedal Spacer
6	8181911	Pedal Spacer
7	8182358	Pedal Spacer
8	8181369	1/4-20 Lock Nut, Nyl. Ins. Gr.5
12	8181977	3/16" x 1-1/2" Clevis Pin
13	8120469	Hair Pin Cotter
14	8181984	1/4-20 x 1" Hx.Hd.Cp.Scr., Gr.5
16	8181708	Pedal Extension Spring
21	8501003801	Cam Lever Follower
23	8107635	5/16" Flat Washer
24	85608197	Stop-Pedal
25	8107419	Hair Pin Cotter
26	8301121	Washer
27	8183398	Pedal Shaft
28	85009985	Valve Mounting Bracket
29	8106301	1/4" Hex Hd Self Tap Screw, Gr.5
30	8181989	10-24 x 3/8 SHCS, Gr.8
31	8182001	10-24 x 3/4 SHCS
*36	see p.22	Valve, TT Rotation Pedal
*37	see p.22	Valve, TT Clamp Pedal
*38	see p.22	Valve, Bead Loosener Pedal
*40	see p.22	Valve, TT Clamp Pedal
44	85009982	Spacer-Valve, Clamp, TT
45	83015371	5/16-18 x 1/2 SHSHS Screw
46	85608195	Pivot Link
47	81846751	Oil Injector Assembly
48	85608560	Block-Lower Stop Pedal
49	8103737	Release Valve
57	8182332	Foot Pedal Guard
58	8106455	Clevis Pin

***Valve (available only as individual component, see page 22)**

**Accessory Item

Foot Pedal Assembly (Air)

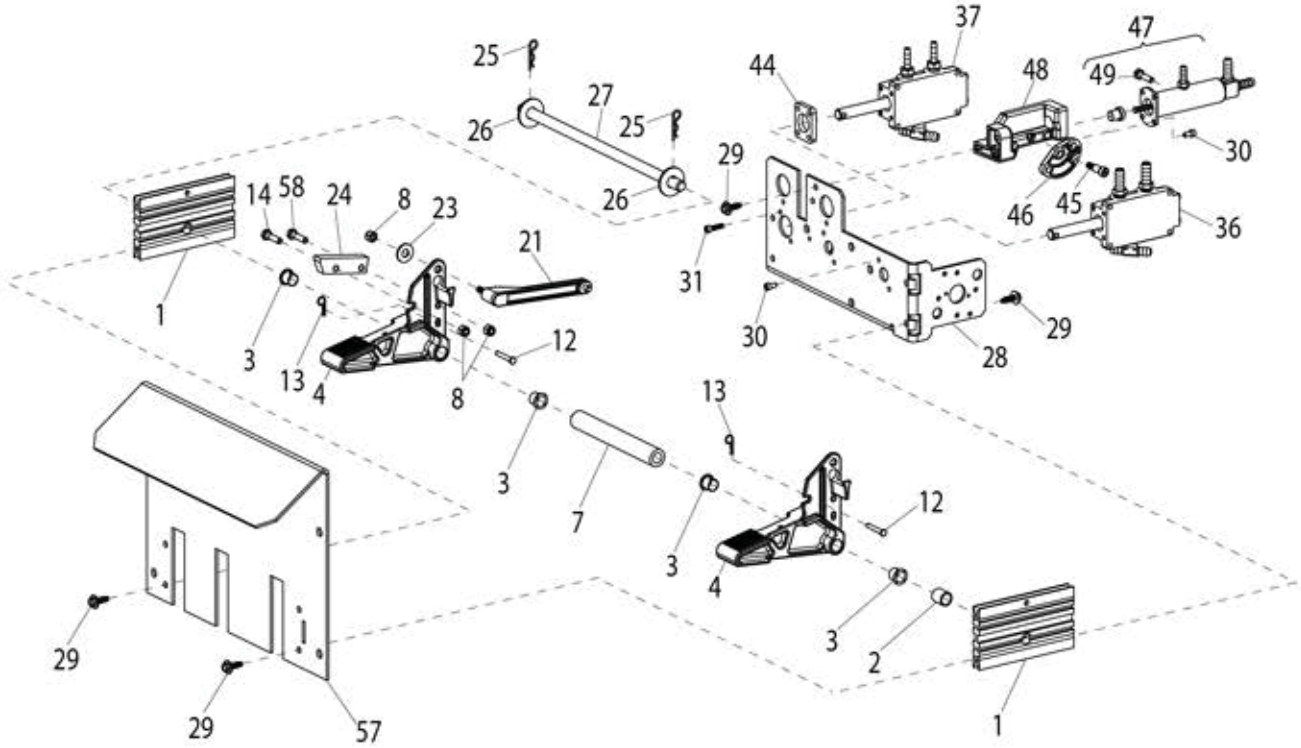

2 Pedal

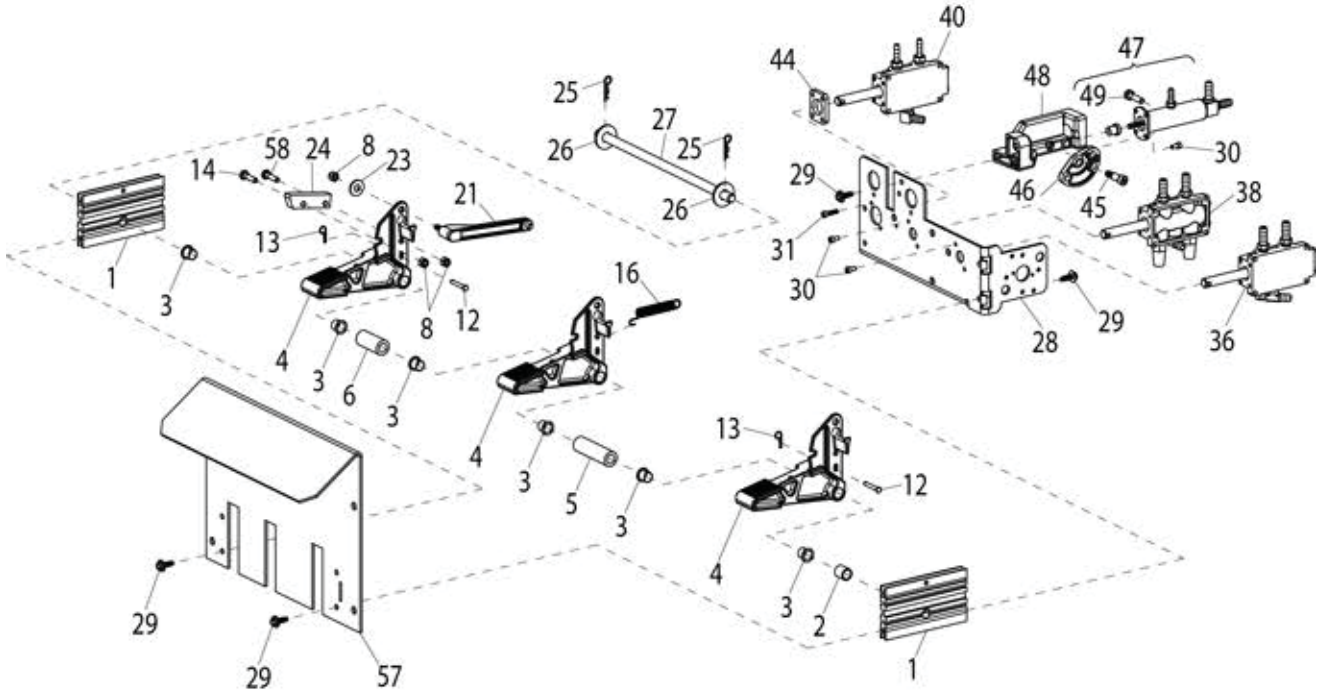

3 Pedal

Table Top and Shaft Housing Assembly

Item	Part No.	Description
1	8181929	3/8-16 x 1", Gr.8 Skt. Hd. Cap Scr.
2	8181704	Table Top Plate
3	8182024	Inflation Nozzle
4	8182025	1/4" Steel Ball
5	8182083	3/4" Jam Nut
6	8184126EX	Adjustable Rim Clamp
7	81822501	Adj. Clamp Plunger/Spring Assy.
8	8182248	Carrier/Cover - Cylinder End
9	8101039	1/2" Lock Nut, Gr.5
10	8182249	Carrier/Cover - Clamp Adj.
11	85610388	Pivot Link W/C
12	8182279	Adj. Clamp Link Bolt
13	8181731	Table Top Pivot Plate
14	8183476	ø1/4" x 3/4" Roll Pin
15	8181733	Pivot Block
16	85610716	5/16-18 x 5/8" Flange Whiz-lock Scr.
†17	8182613	Table Top Cylinder Assembly
18	8182627	1-5/8" Dia. Cap Plug
19	8181742	16MM x 40mm Hex Head Bolt Gr.10.9
20	8182979	ø16mm Molded Washer
21	8181990	Spider Assembly
22	8182619	Rotary Coupling Assembly
23	81819981	Fitting-Ell,Pkg
24	8104844	Fitting-1/8 NPTM X 1/4 Hose
25	85606734	Transmission Pulley (3-hole)
	85607708	Transmission Pulley (4-hole)
	8181658	Transmission Pulley (6-hole)
26	8140567	1/2-13, Hex. Whiz-lock Nut
27	8183156	ø2" X ø2 3/4" x .010 Washer
28	85608497	Transmission Kit
29	940084	5/16-18 x 1 1/4 Ser. Wash.Hd.Scr.
30	8184674	Motor Pulley (All **except** 90X)
	85609750	Motor Pulley (90X 2 speed motor ONLY)
31	8180047	Motor V-Belt, 4L380
	85608496	Motor V-Belt, 4L390
32	8182178	5/16-18, Hex. Whiz Lock Nut
33	85609921	Motor Mounting Bracket
34	8143044	Tinnerman Sq. Captive Nut 3/8-16
35	8184691	Motor, Electric 115V
	81827321	Motor, Electric 220V, 50Hz, 1ø
	85609751	Motor, Electric 115V, 60Hz, 2-speed (90x only)
	85610405	Motor, Electric 220V, 50/60Hz, 2-speed (90x only)
36	8184562	Motor Cable Assy, 4-wire w/plug, 115V
	8181511	Motor Cable Assembly, 4-wire, 220V
	85000632	Motor Cable Assembly, 5-wire, 220V
	85610389	Motor Cable Assembly, 2-speed, 115V
	85610438	Motor Cable Assembly, 2-speed, 220V
37	8181190	Air Motor, Gast. 6AM
38	85606398	Exhaust Valve
39	8181206	1/2" NPT Muffler
40	85607160	3-position Laminated Clamp Cover Plus **w/Points** for **Blk**
	85607429	3-position Laminated Clamp Cover Plus **w/o Points** for **Blk**
	85000768	3-position Laminated Clamp Cover Plus **w/Points** for **Wht**
	85600314	3-position Laminated Clamp Cover Plus **w/o Points** for **Wht**
41	8560716108	Laminated Clamp Plus Grip **Blk** (8 pk)
	8560716140	Laminated Clamp Plus Grip **Blk** (40 pk)
	8500059408	Grip-Clmp, Lmntd, **Wht**, 8/PKG
	8500059440	Grip-Clmp, Lmntd, **Wht**, 40/PKG
42	850006102	1/4 x 1-1/4 x #10-24 Shoulder Screw
43	85607159	3-position Laminated Clamp Plus
**44	8183604	Bootie Kit, Rim Clamp, Pkg of 10
**45	85607787	Grip Max Plus™, Laminated Clamps, Pkg. of 4
	85607786	Grip Max Plus™, Laminated Clamps (External Clamp Only), Pkg. of 4
46	81826822	#10-24 Rvsble Hex Lk Nut
47	8301805	#10 Washer
48	85609097	Hole Plug (Table w/o Inflation Jets)
49	85610108	Transmission Hole Plug
50	8560026401	Manifold-1/4NPT 3X3/8 TBE
51	85610717	Retainer Bracket
52	8106303	Nut-Hex,3/8-16,LK,Whz,Znc

†Cylinder Assemblies
**Accessory Item

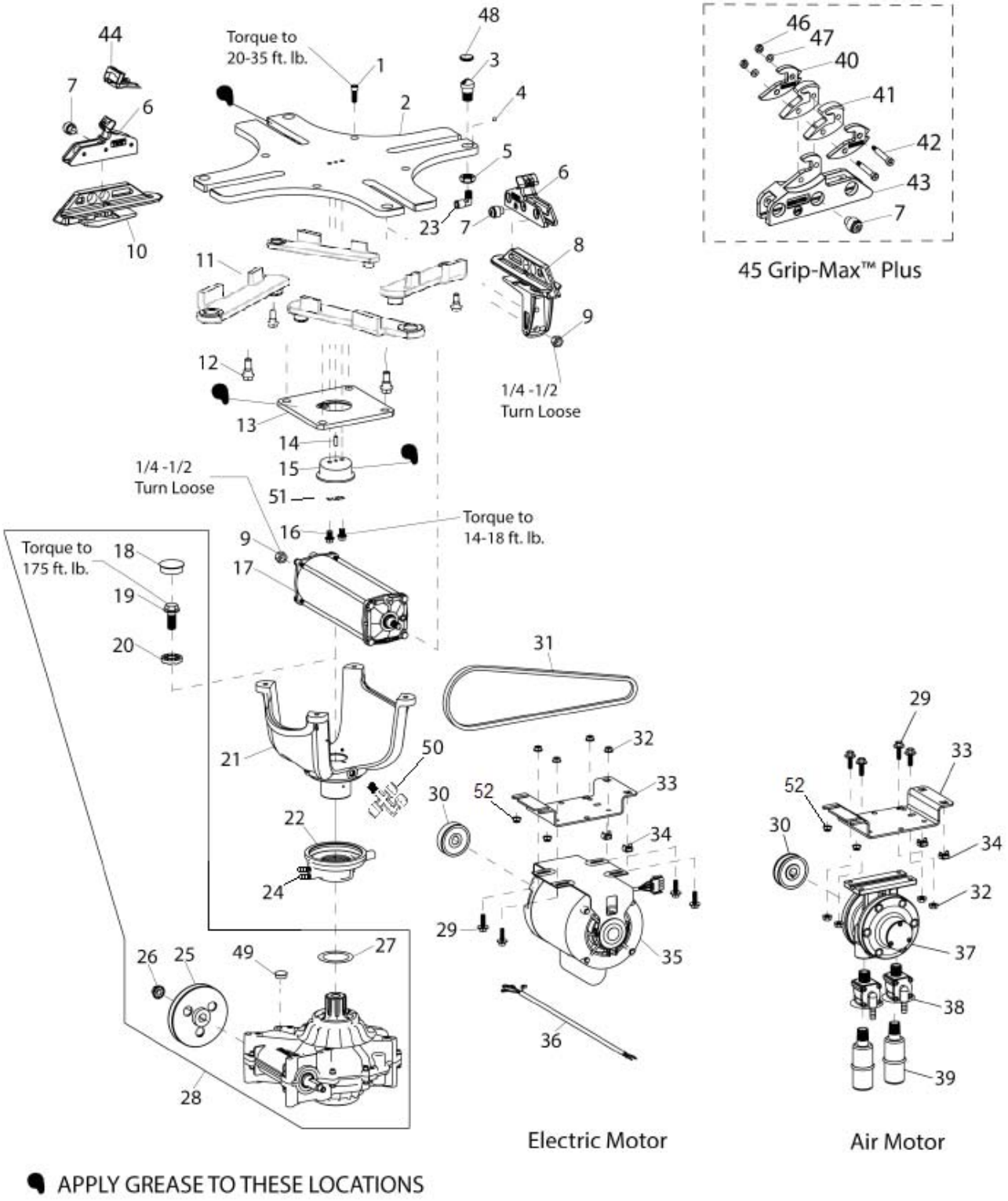
Torque to
20-35 ft. lb.
1/4 -1/2
Turn Loose
1/4 -1/2
Turn Loose
Torque to
14-18 ft. lb.
Torque to
175 ft. lb.
45 Grip-Max™ Plus
Electric Motor
Air Motor
APPLY GREASE TO THESE LOCATIONS

Inflation Guard Assembly - 6065, 7665

Item	Part No.	Description
1	8182318	Handle Spring-B.L. (7665)
2	8104611	5/8" N.F. Jam Nut Gr.5
3	8104613	5/8" Ext. Tooth Lock Washer
4	8182981	Warning Decal
5	8120408	1/4-20 x 1-3/4 H.H. Cap Scr., Gr.5
6	8106301	1/4" Hex Hd Self Tap Screw, Gr.5
7	8182862	Valve Actuator
8	8182842	Front Cover
9	8183067	19" Trim Strip
10	8104673	Bushing, 1/4" Valve
11	8105671	End Cap, 1/4" Valve
12	8102468	Poppet Spring, 1/4" Valve
13	8104649	Poppet, 1/4" Valve
14	8104600	1/4" Valve Comp.
15	8000378	1/4" Brass St. Fitting
16	85606362	Hose Clamp-13mm Spring
17	8103649	ø1/4 x 12" Hose
18	8000376	ELL 90° 1/4 Hose Fitting
19	8182090	3/4" x 61" Lg. Hose
20	8106289	ø1/4" x 22" Hose
21	8110325	1/4" NPT Male Run Tee
22	8109466	Piloted Valve
23	8143169	1/4-20 Whiz Lock Nut, Gr.5
24	8110496	Volumn Chamber
25	8109471	1/8" Brass Hex Nipple
26	8109468	Pressure Repeater
27	8109472	1/8" Inline Filter
28	8111083	Regulator
29	8104844	1/8 NPT x 1/4 Hose St Fitting
31	8102048	ø1/4" x 15" Hose
32	8110328	1/8" NPT Tee
33	8181213	ø1/4" x 3" Hose
34	8182367	1/4 NPT Brass Cross Fit.
35	8108605	Female Coupling Assembly
36	8000580	1/4 NPT Close Nipple
37	8104969	Check Valve
38	8183120	Inflation Guard Pkg
39	8183237	Safety Cage Handles Cover
40	920531	ø1" x 0.281 x 0.063 Washer
41	8301035	3/8-16 Nylok Nut
42	8106302	3/8" Whiz Lock Screw, Gr.5
43	8182846	1/2-13 x 5 U-Bolt
44	8301122	0.500-13 NYLK Hex Nut

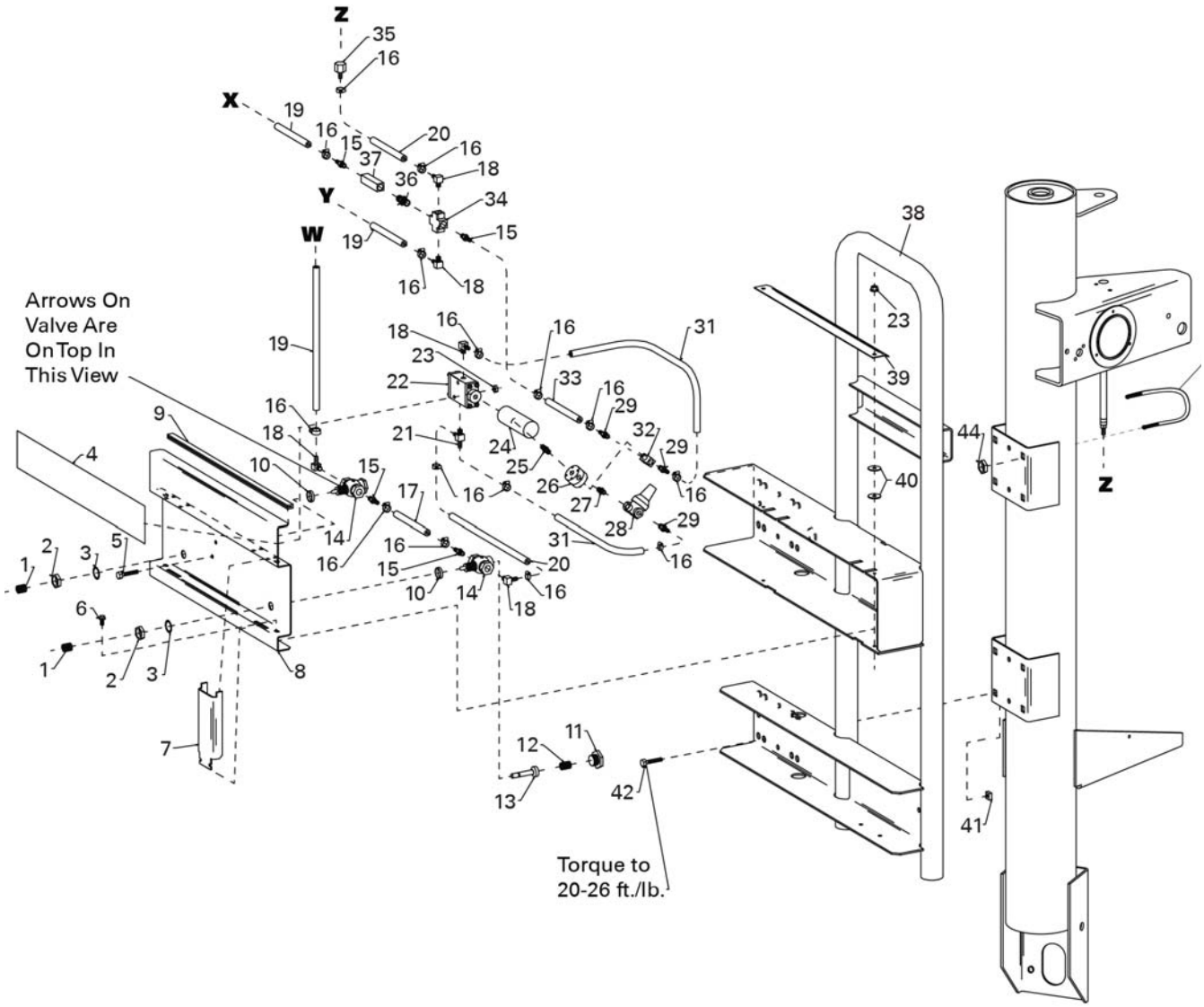

* Not Standard On All Models

Apply Grease To These Locations

Valve Assemblies

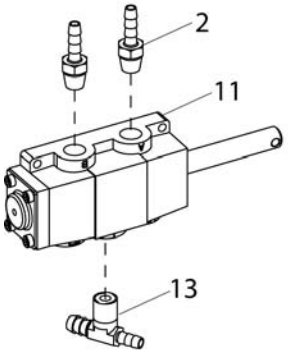

Table Top Clamp Pedal Valve Assembly

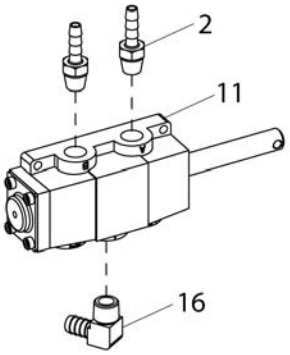

Table Top Clamp Pedal Valve Assembly

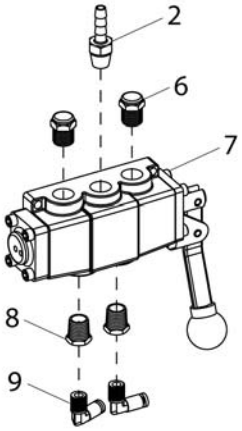

Robo Arm Valve Assembly

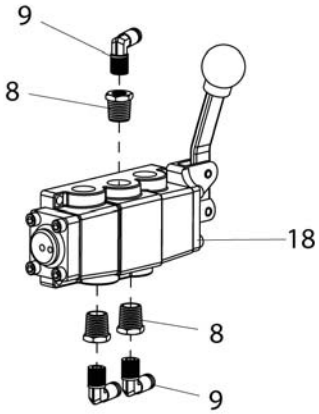

Helper Arm Valve Assembly

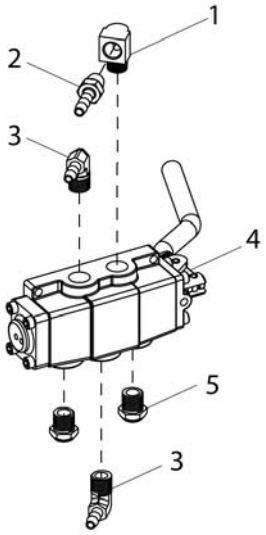

Bead Loosener Arm Valve Assy (old style)

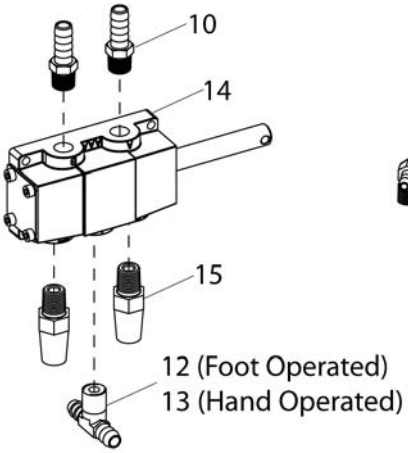

Bead Loosener Arm Valve Assembly

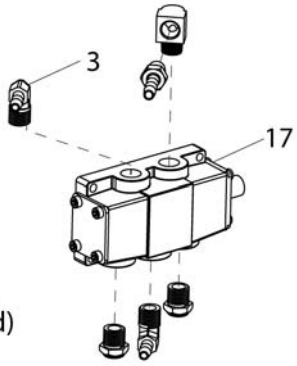

Bead Loosener Arm Valve Assembly

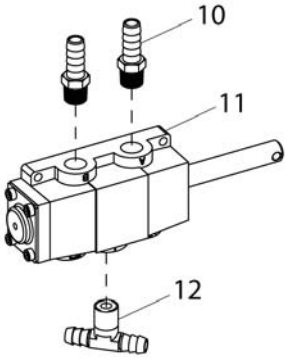

Air Motor Pedal Valve Assembly

Item	Part No.	Description
1	8000372	1/4 NPT, 90° St. ELL Fitting
2	8000378	1/4" Brass St. Fitting
3	8000376	ELL 90° 1/4 Hose Fitting
4	8185581	3 Position w/Handle Valve
5	85607855	1/4 NPT Muffler, Small
6	8105615	Small Muffler
7	8185585	3 Position Valve
8	8109481	1/4 NPT x 1/8 NPT RDCR Fitting
9	8181997	90° Elbow 1/8 NPT x 1/8" Fitting
10	8101898	St. 1/4" NPT 3/8" Hose Fitting
11	8184369	4-Way w/Pull Pin Valve
12	8184467	1/4" NPT x 3/8 BRB x 3/8B Tee Fitting

Item	Part No.	Description
13	8184469	1/4" NPT x 3/8 BRB x 1/4B Tee Fitting
14	8181986	4-Way w/Pull Pin Valve
15	906960	1/4 NPT Muffler
16	8184256	1/4 NPT, 1/4 HSE ELL Fitting
17	8184878	4-way Valve, Pedal Operated
18	85609908	3 Position Valve

Cylinder Assemblies

Item	Part No.	Description
1	8183310	B.L. Cylinder Bottom Cap
2	8182016	3/4"-10 Nylon Insert Nut, Gr.5
3	8181860	B.L. Cylinder Lower Washer
4	8181863	B.L. Cylinder Upper Washer
5	85607881	O-ring
6	8181574	B.L. Cylinder Barrel
7	85609719	Cylinder-Bushing/Cap Assy
8	8181862	Tie Bolt, 1/2-13 x 10-1/4" Lg., Gr.5
9	8182079	Seal Kit, B.L. Cylinder
*10	8000376	ELL 90° 1/4 Hose Fitting - Hand B/L
	8184256	ELL 90° 3/8 Hose Fitting - Foot B/L
11	8183311	Piston Rod, All 50 Series & 70 Series w/ Foot B.L.
	85608568	Piston Rod, 70 Series Hand B.L. w/ Heim Joint

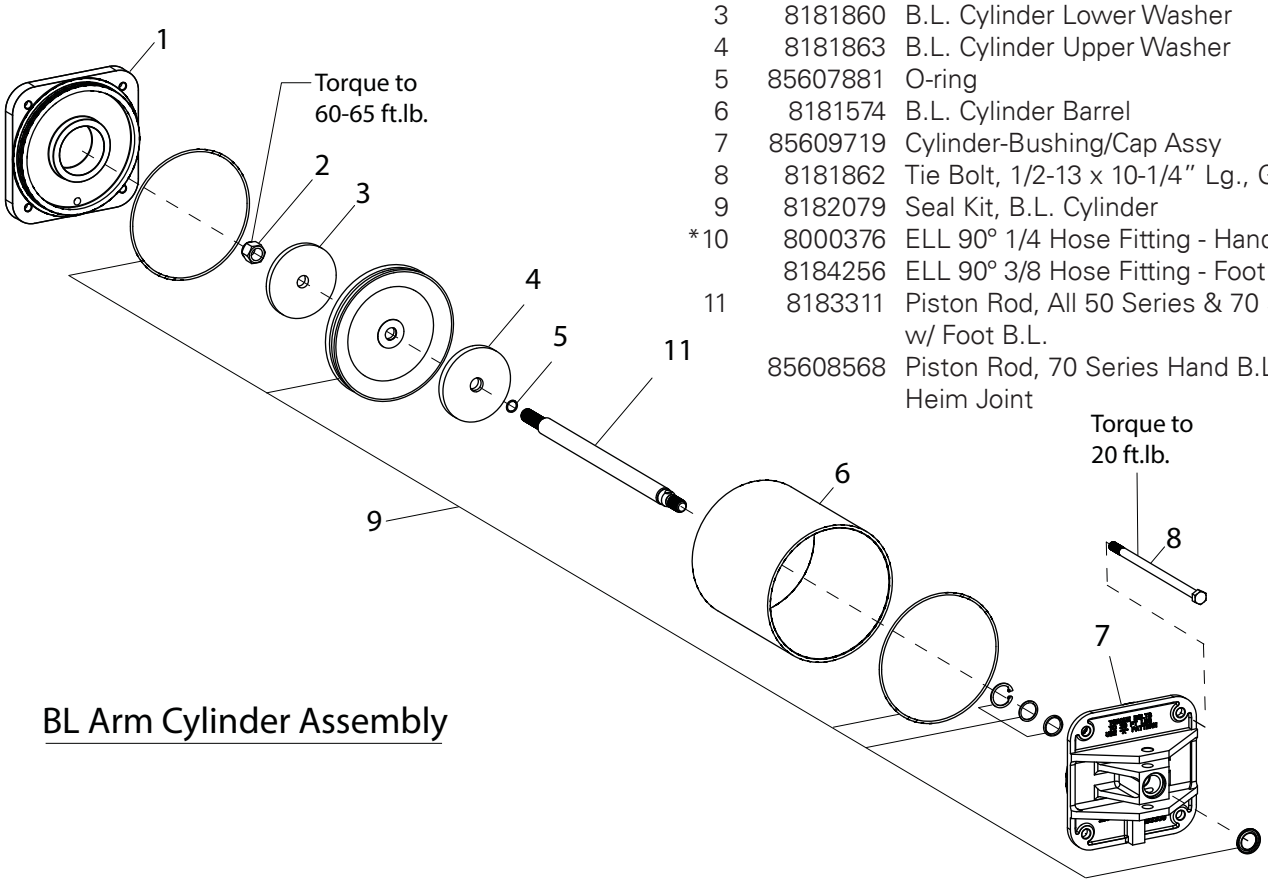

BL Arm Cylinder Assembly

Item	Part No.	Description
1	8181183	5/16-18 Nylon Insert Lock Nut Gr.5
2	8181622	Cylinder Bottom Cap
3	8182719	1/2-13 Locking Jam Nut, Gr.5
4	8183772	O-ring
5	8181629	Shaft, Tabletop Cyl.
6	8181627	Sleeve, Cylinder
7	8181620	Cylinder Top Cap
8	8181633	Tie Bolt, Tabletop Cylinder
9	8183811	Table Top Cylinder Seal Kit

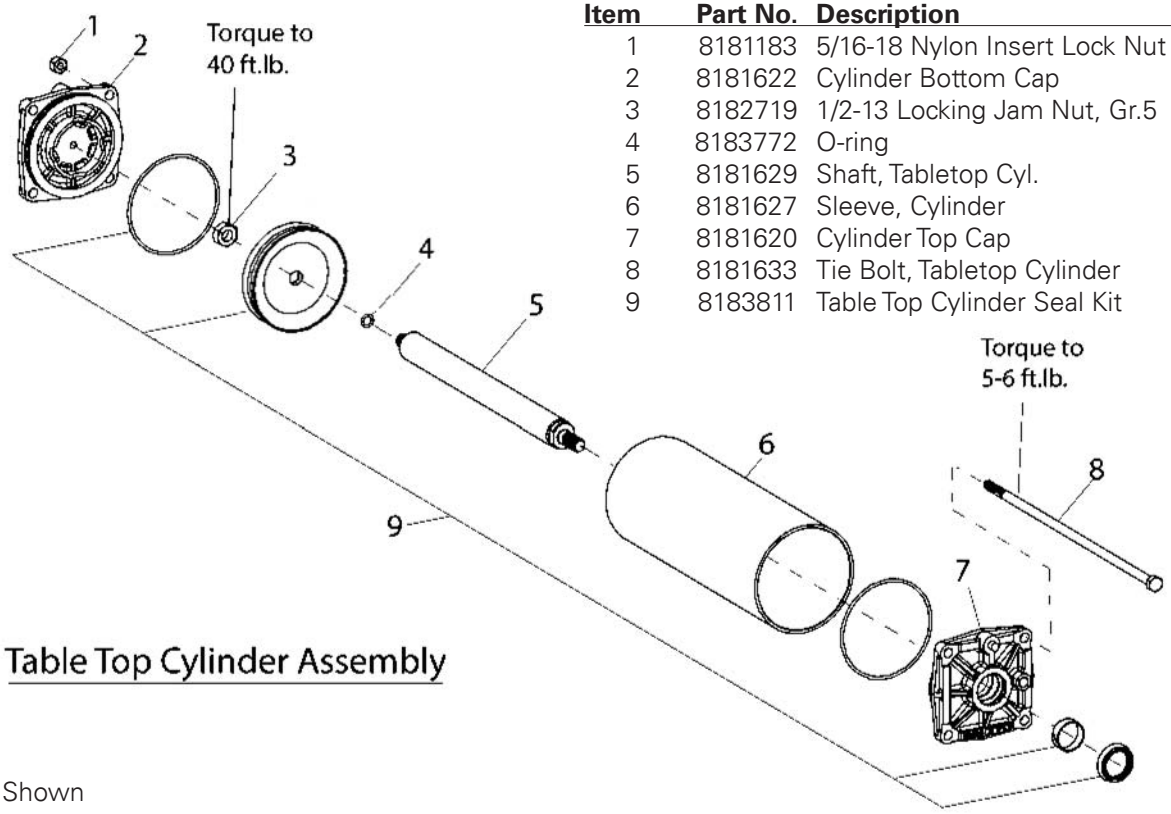

Table Top Cylinder Assembly

*Not Shown

Leverless Bead Lifter

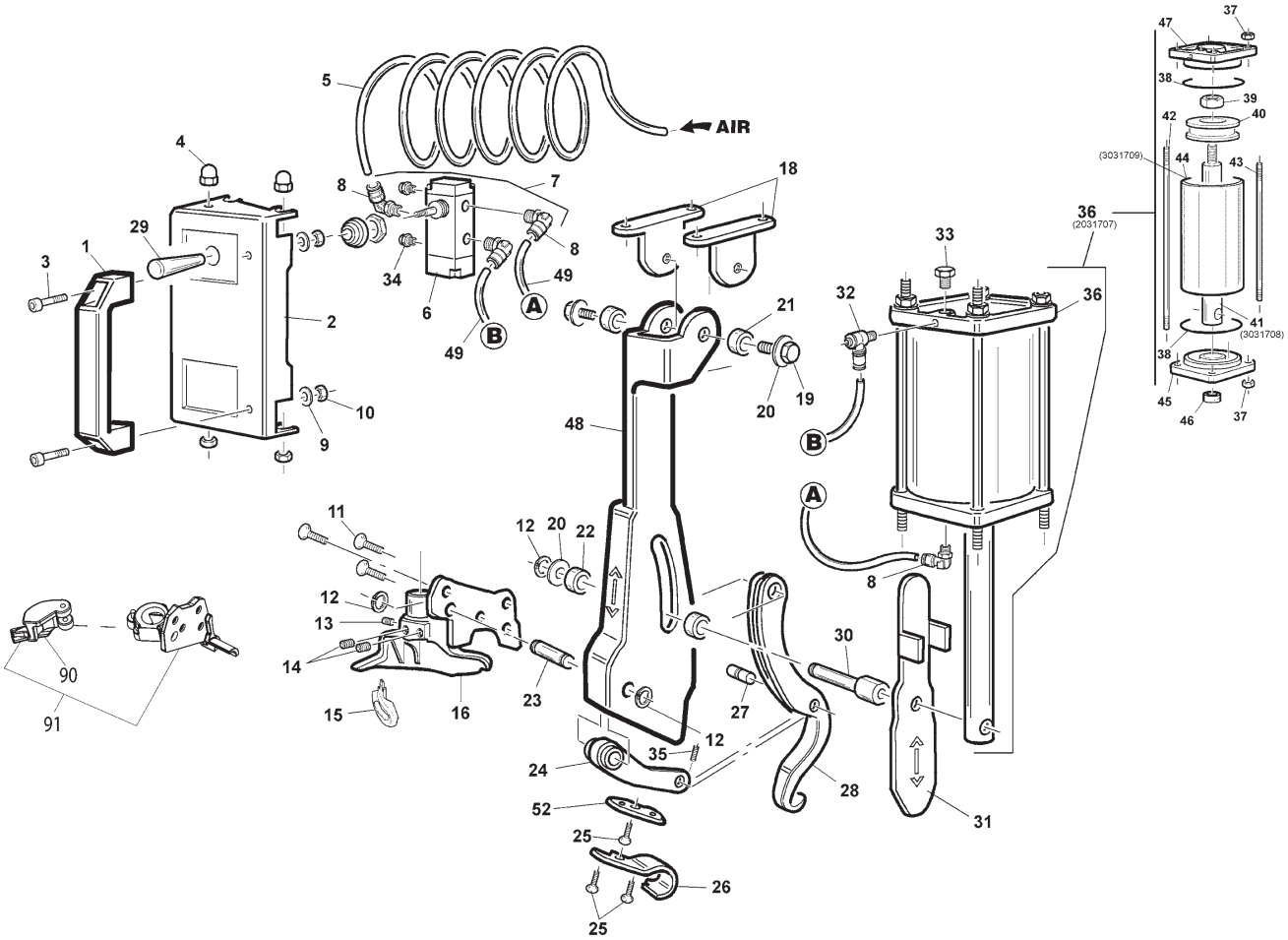

Item No	Part No.	Description
1	84297851	Handle
2	87019215	Valve Box
3	84399954	8 x 20 Screw
4	84395374	M8 Nut
5	83030571	6 x 4 Spiral Hose, L=1500
6	84198285	5-way Valve
7	82006996	Valve
8	84198618	1/8" Union
9	84399829	8 (8, 4 x 16 x 1,5) Washer
10	84399900	M8 Self-locking Nut
11	84393957	0 x 12 Screw
12	84399864	D.12 Seeger Ring
13	84395530	12 x 2 Screw
14	84393346	Screw
15	83019305NE	Back Slide
16	83033830	Touchless Mounting Tool
18	83019202	Connection Plate
19	84399434	12 x 20 Screw
20	84398637	ID 12 x 21 x 2, 5 Washer
21	83017334	12/18/8, 2 Bush

Item No	Part No.	Description
22	83017302	12/18/6, 5 Ferrule
23	83019210	Pin - 54mm long
24	83019214	Connection Rod
25	84393753	5 x 8 Screw
26	83033278NE	Front Slide
27	83019212	Tool Pin - 26mm long
28	83019213	Touchless Tool
29	83010284	D.14 x 45 M5 Control Handle
30	83019211	Cylinder Pin
31	83019561	Support Plate
32	84194004	MR 41 6 M6 Union
33	84199161	1/8" Plug
34	84199610	1/8" Silencer
35	84399957	6 x 8 Screw
36	82031707	Cylinder Unit
37	84399976	Nut M8
38	84298822	O-ring D.68, 26 x 3, 53
39	84399865	Self-locking Nut M12
40	84198856	D.75 Piston
41	83031708	Cylinder Shaft

70X Series

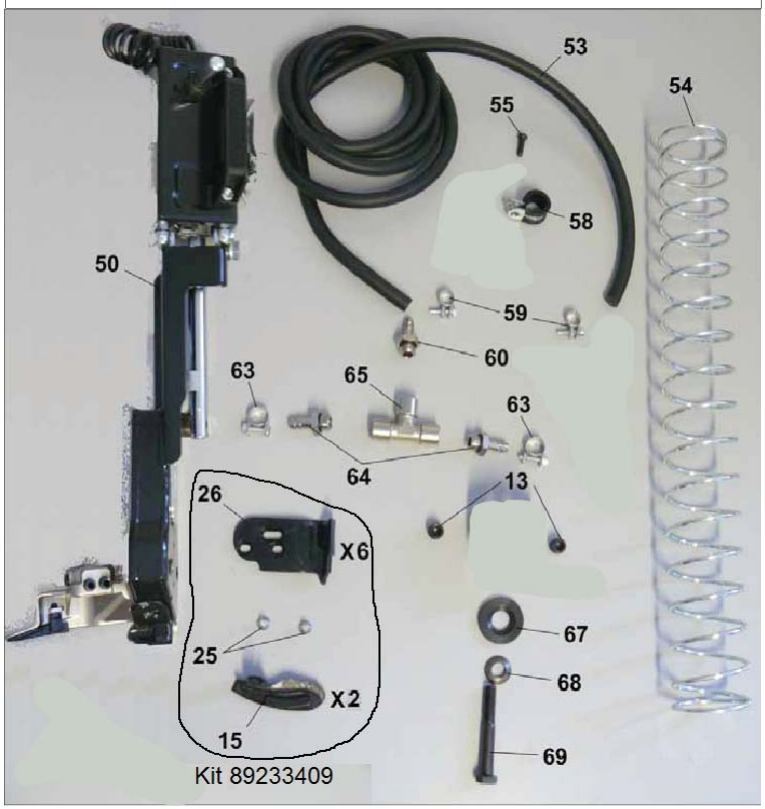

Item No	Part No.	Description
42	83019208	8 x 1, 25 x 180 Special Screw
43	83019204	M8 X 1, 25 x 164 Special Screw
44	83031709	Cylinder Liner L=125
45	83015024	Flange
46	83199601	Scraper
47	83019467	D.75 SO Side Hole M6 Back Flange
48	87019199	Tool Holder
49	83019959	6 x 6 Hose L=240
51	84396878	12 x 25 x 0, 5 Steel Shim
52	83031595	Threaded Tab
53	8099053	1/4" Hose L=7.5 Ft
54	83031235	Spring
55	8106301	1/4-20 Screw
58	8182044	Hose Clamp
59	85606362	1/4" Clamp
60	8000378	1/4" Barb
63	85606363	3/8" Clamp

Item No	Part No.	Description
64	8101898	3/8" Barb
65	8000643	Tee
67	84395804	2 x 35 x 5, G Type 14, Washer
68	84395805	2 x 21 x 4, C Type 10, Washer
69	8107715	3/8-16 UNC Screw, L=1.25"
*85	84199461	Adapter
*86	84194089	1/8" Union
*87	84194088	Quick Union
*88	84198993	1/8" Quick Union
*89	84199026	Union
90	85608961	Hybrid Duckhead® Tail
91	85608960	Hybrid Duckhead, Mount/Demount Tool, Leverless

*Not Shown

Electrical Schematics

Domestic and C.S.A. (Single-Speed Motors)

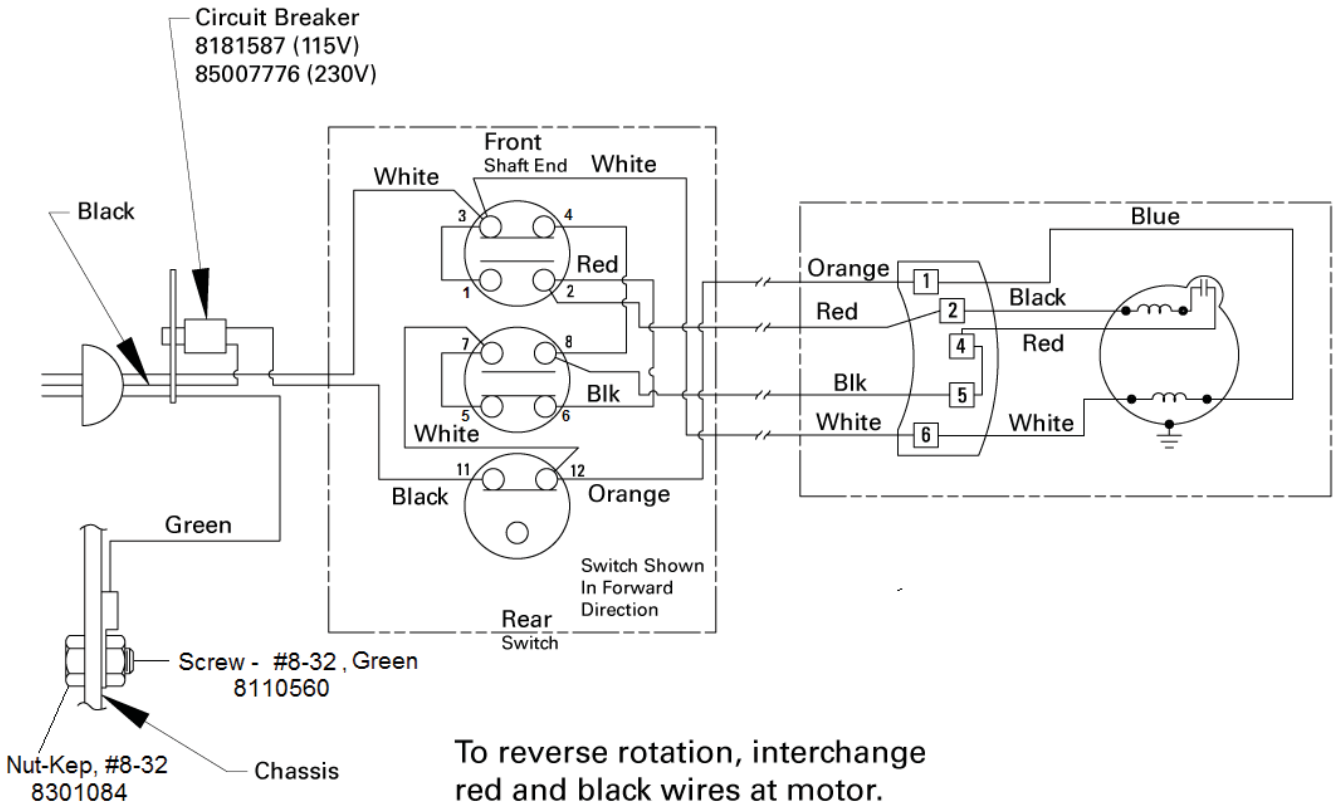

Power Cords

Part No.	Description
85610349	115V
85610321	220V, 50 Hz
85606402	China Only
85609034	Australia Only

115V Motor, 2-speed

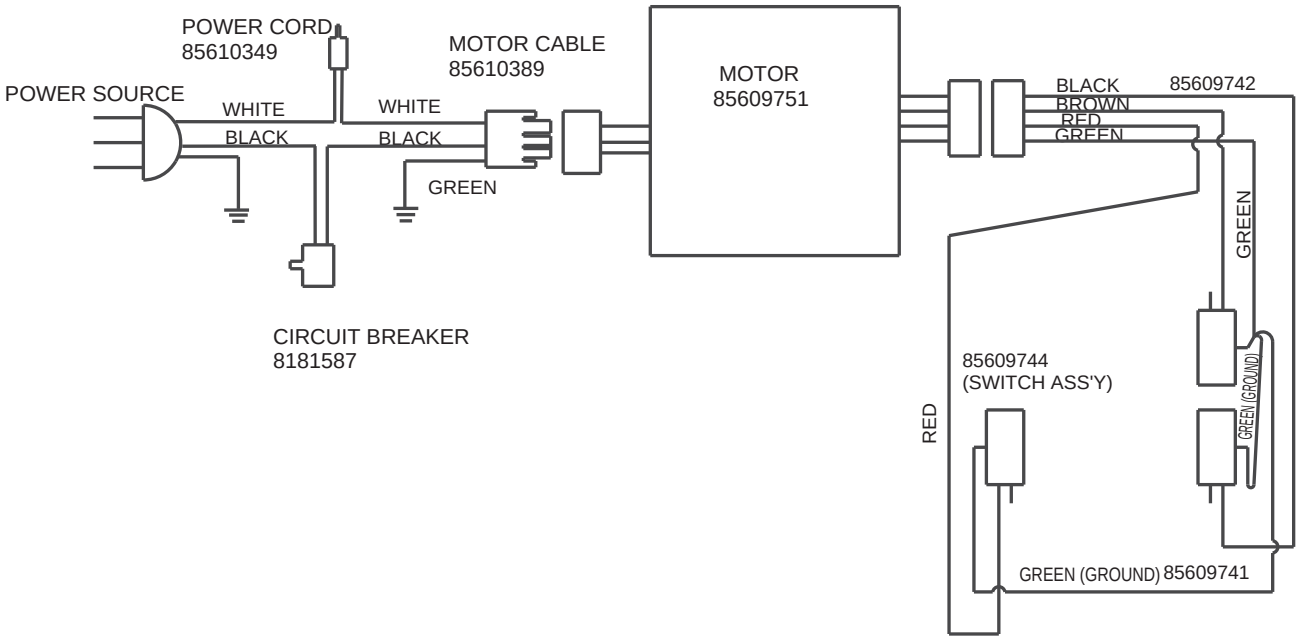

220V Motor, 2-speed

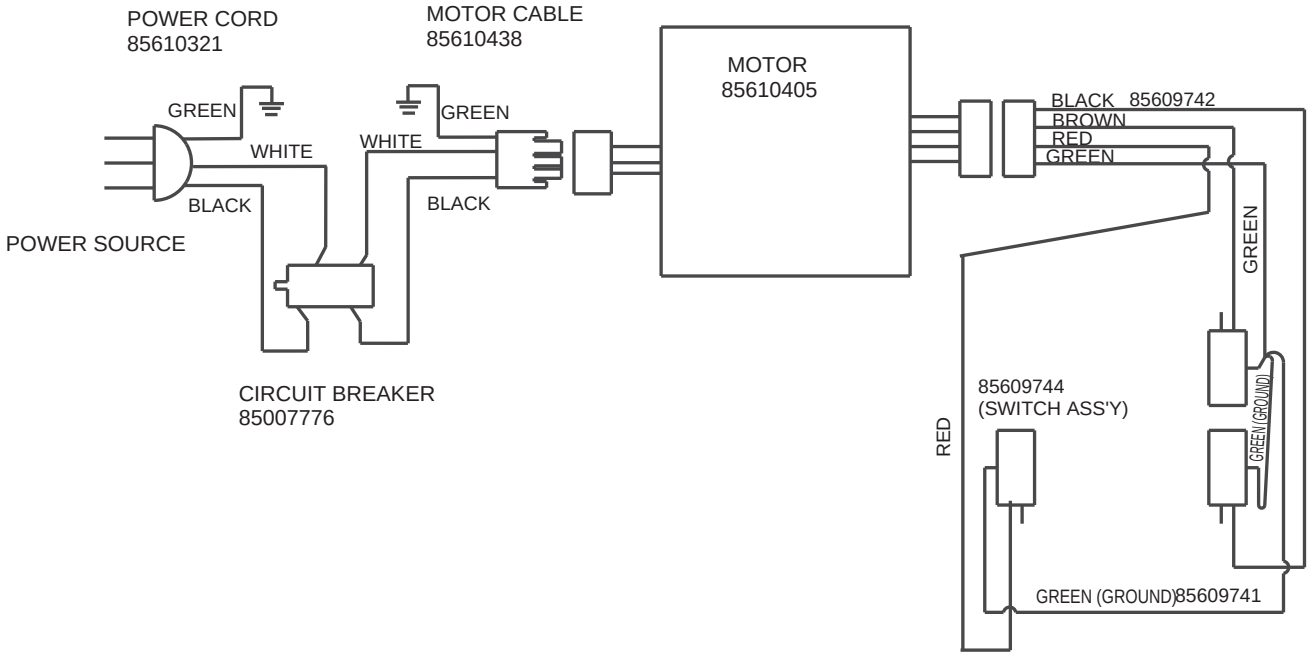

Pneumatic Diagram

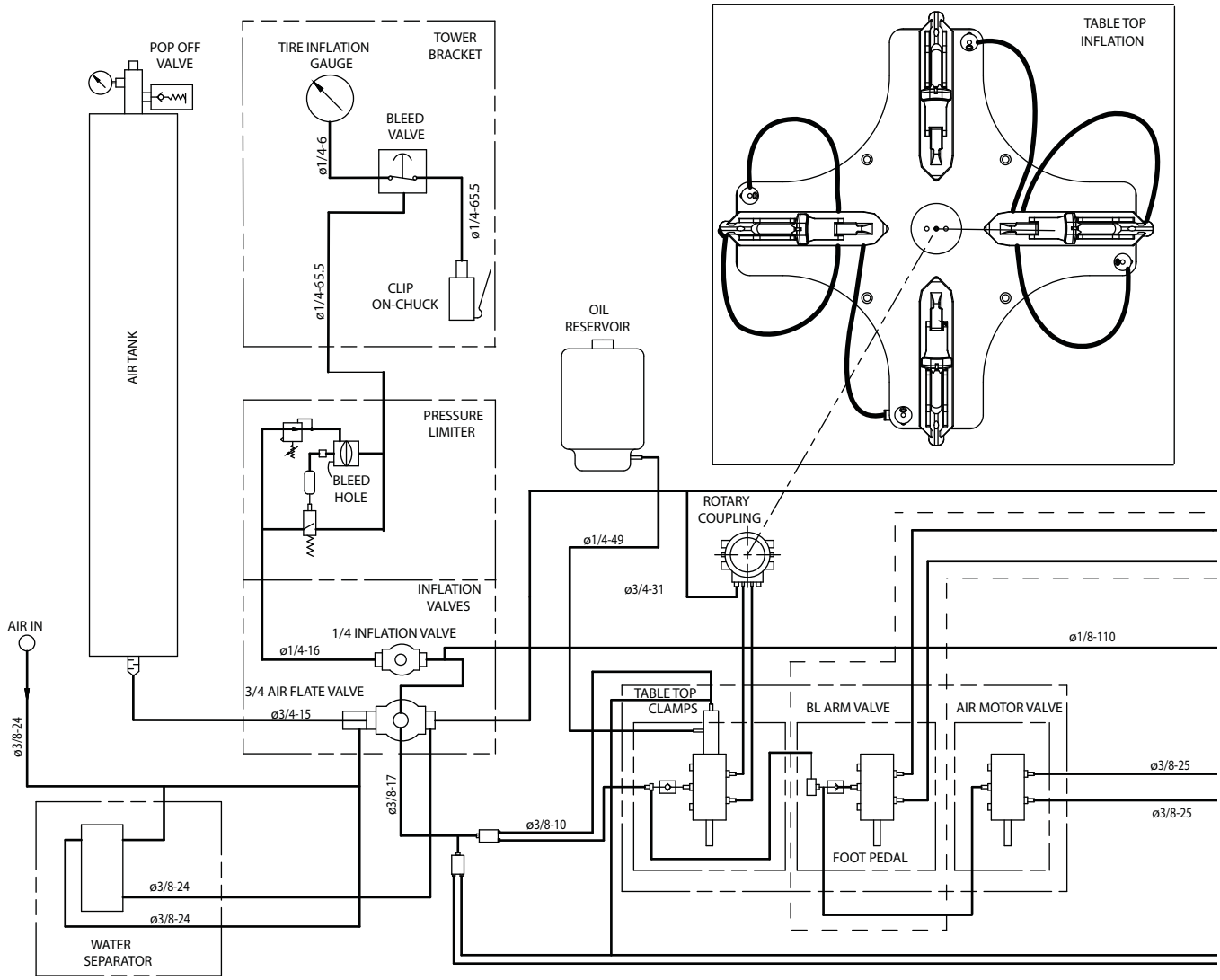

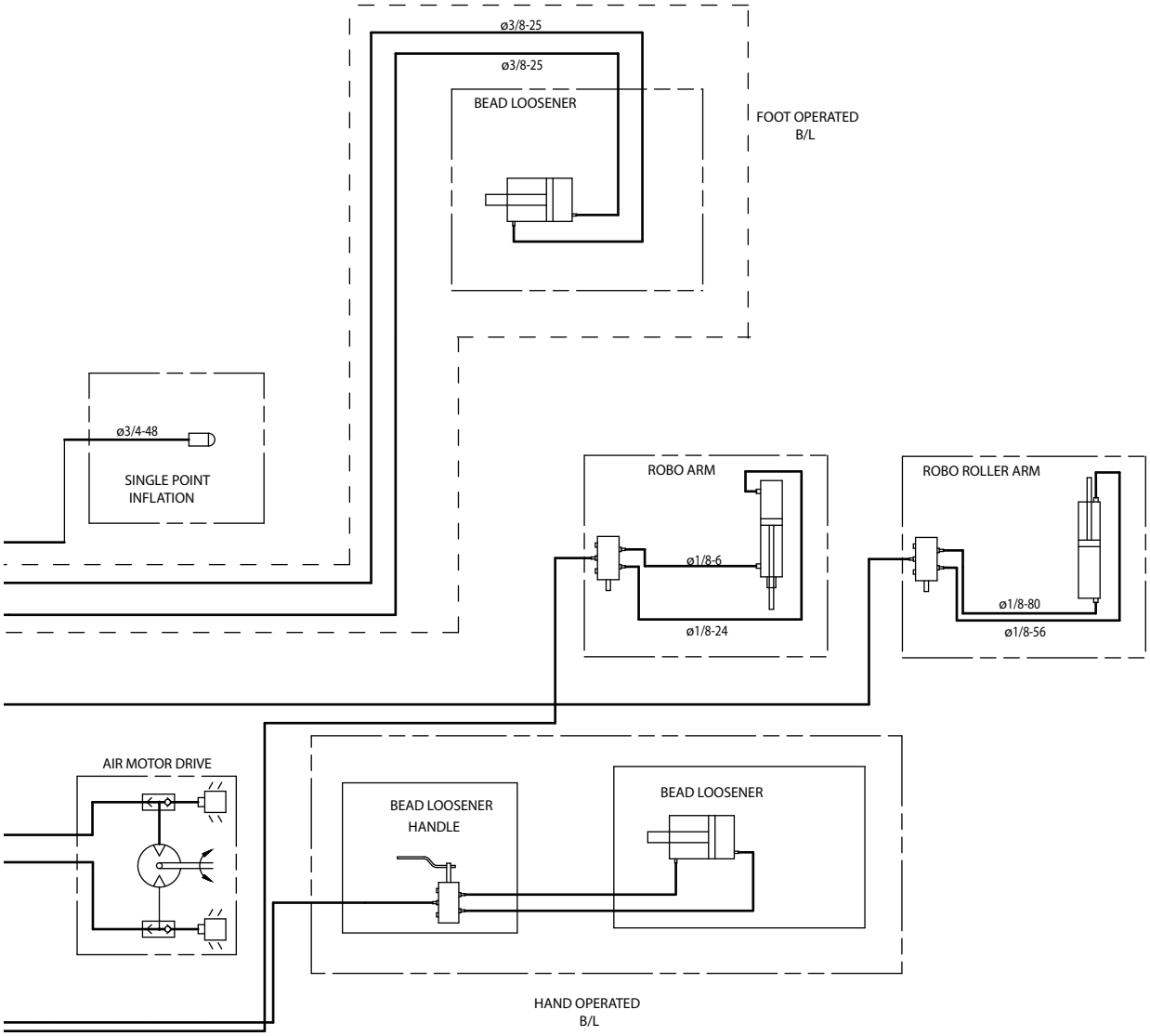

Note: All possible tire changer options are displayed. Your tire changer will include the options specified by the model number.

Notes

Notes

Rim Clamp® Tire Changer

All-Air Unit Compressed Air Requirements

COATS® Rim Clamp® tire changers that are powered entirely by air (no electric motor) require a single compressed air power source. Refer to the table below for exact specifications.

Tire Changer Model	Compressor Size	Capable of
All	**5 HP**	**14-15 SCFM at 150 PSI**

Oil Injector Maintenance

The oil injector (on units so equipped) typically require annual service. The oil level in the oil reservoir tank should be checked regularly.

1. Add oil to the oil reservoir tank if the fluid level in the tank is at the "add" mark. Remove cap from the oil reservoir tank and add Chevron Regal® R & O 32 oil to the "full" mark. Replace the cap and clean up any spilled oil.

Important: If the hose between the reservoir and injector is ever empty of oil, an air lock will form. After filling the reservoir tank, the line must be bled of air at the injector connection as follows:

a. Remove the side panel and locate the oil injector.

b. Loosen the bleeder screw until oil drips from the screw (or press bleeder button, if so equipped).

c. Retighten bleeder screw (if required).

d. Cycle the clamp valve a few times checking for oil and air leaks.

e. Test the machine for full function before returning the machine to operation.

Air Gauge Check and Recalibration

1. Inflate a standard 15" passenger car tire/wheel assembly to 32 PSI. Use a high quality stick-type pressure gauge to verify the pressure. Attach the tire changer's inflation hose to the valve stem and check the pressure reading on the air gauge. If it does not read 32 PSI, recalibrate the gauge.

2. Remove the screw-on lens. Loosen the 2 screws on the face of the gauge. Loosen them just enough so that the gauge face moves. Do not remove the screws.

3. Rotate the gauge face until the 32 PSI mark is aligned with the gauge needle. Tighten the 2 screws and replace the lens.

Danger, Warning, Caution, and Instructional Decals

Always make the cleaning of these important decals a part of your regular maintenance routine. If they are damaged or illegible, replace them immediately. Your safety, and the safety of others is involved!

Regal® is a trademark of Chevron Products Company

 © Copyright 2011 Hennessy Industries and COATS® All Rights Reserved. Printed in USA